产品规格承认书

Product Specification Approval

产品名称（**Product Name**）：	智能板铁锂 4~8 串 40~100A 同口带均衡 Smart BMS LiFePO4 4~8S 40~100A Common Port With Passive Balance	
产品型号（**Product Number**）：	DL-R10K-FTJ	
客 户 名（**Customer Name**）：		
客户料号（**Customer P/N**）：		
送样日期 **Sample Delivery Date**	版次 **Version**	文件编号 **Document No.**
	A10	
编制(Prepared by)	**核准(Approved)**	**审核(Audit)**
HM Jiang	**FG Yang**	**Thomas Lin**

客户确认栏 Customer Confirmation Column

确认意见 Confirm opinion：

客户签章 Customer signature:

日期 Date:

注意（Notice）：

1.收到样机确认 OK 后请及时回签，7 天内没有回签及问题反馈，我司默认客户测试合格；规格书中的图片为通用机型图片，可能与送样样机有差异，此份规格书达锂电子保留最终解释权.After receiving the prototype to confirm OK, please sign back in a timely manner, within 7 days without signing back and problem feedback, our default customer test qualified; specifications in the picture for the general model picture, may be different from the delivery of the prototype, this specification by the Dongguan Daly Electronics Co.

2.客户批量前，请在规格书中签字回传，并说明详细功能说明，我司才安排批量.Before the customer batches, please sign the specification and return it, and explain the detailed function description, and our company will arrange the batch.

目录

1. 简介 (Introduction) 3
2. 产品概述及特点(Product Overview and Features) 3
3. 产品选型(Product Selection) 3
4. 系统框架图(System Framework Diagram) 4
5. 技术参数 (Technical Parameters) 4
5.1. 充放电及均衡 Charging & Discharging With Passive Equalization 4
5.2. 过充保护 Over-Charging Protection 5
5.3. 过放保护 Over-Discharging Protection 5
5.4. 过流保护 Over-Current Protection 6
5.5. 短路保护 Short Circuit Protection 6
5.6. 外部温度保护 Temperature Protection 7
5.7. MOS 温度保护 MOS Temperature Protection 8
5.8. 压差告警 Voltage Difference Alarm 9
5.9. 温差告警 Temperature Difference Alarm 9
5.10. 热失控 Thermal runaway 10
5.11. 性能参数 Reliability Parameter 10
6. 辅助参数(Auxiliary module parameters) 11
7. 通信说明(Communication Description) 12
7.1. UART 通讯 12
7.2. RS485 通讯(选配 optional) 12
7.3. CAN 通讯 (选配 optional) 12
7.4. 蜂鸣器逻辑 Buzzer logic 12
7.5. 指示灯逻辑 Indicator light logic 12
7.6. 钥匙开关逻辑 Keyswitch logic 12
8. 上位机说明(PC Master Description) 13
9. 保护板尺寸图(Dimensional Drawing Reference) 13
10. 接口定义(Interface Definition) 14
10.1. 接口引脚说明 Interface pin instructions 14
10.2. 主要线材说明 Description of main wires 15
10.3. 采集与串数对应表 Collection and string number map 16
11. 保修(Warranty) 16
12. 接线使用说明及 APP 下载 (Wiring instructions and APP downloads) 16
13. 注意事项(Precautions) 17
14. 特别说明(Special Note) 17

1. 简介 (Introduction)

随着锂电池在锂电行业的广泛应用，对电池管理系统也提出了高性能、高可靠性及高性价比等要求。本产品是专门针对锂电池设计的 BMS，它能够实时采集、处理和存储电池组在使用过程中的信息数据，保证电池组的安全性、可用性和稳定性。

With the wide application of lithium batteries in the lithium industry, the battery management system also puts forward the requirements of high performance, high reliability and high cost-effective. This product is specially designed for lithium battery BMS, it can real-time acquisition, processing and storage of battery pack information data in the process of use, to ensure the safety, availability and stability of the battery pack.

2. 产品概述及特点(Product Overview and Features)

- 使用专业大电流走线设计及工艺，能经受超大电流冲击
  Using professional high-current trace design and technology, it can withstand the impact of ultra-large current
- 外观采用注塑密封工艺，提升防潮，防元器件氧化程度，延长产品使用寿命
  The appearance adopts the injection molding sealing process to improve moisture resistance, prevent the oxidation of components, and prolong the service life of the product
- 具有防尘、防震、防挤压等防护功能
  dust proof, shockproof, anti-squeezing and other protective functions
- 有完整的过充、过放、过流、短路、均衡功能
  There are complete over charge, over-discharge, over-current, short circuit, equalization functions
- 采用集成化的设计，将采集、管理、通信等功能集成于一体
  The integrated design integrates acquisition, management, communication and other functions into one
- 具有通讯功能，可通过上位机对过充、过放、过流、充放电过流、均衡、过温、欠温、休眠、容量等参数进行设置
  With communication function, parameters such as over charge, over-discharge, over-current, charge-discharge over-current, equalization, over-temperature, under-temperature, sleep, capacity and other parameters can be set through the host computer

3. 产品选型(Product Selection)

<table>
<tr><td>电池类型 Battery Type</td><td colspan="4">铁锂 LiFePO4</td></tr>
<tr><td rowspan="2">电池串数
Battery String</td><td colspan="4">说明：不支持兼串，出厂时需确定串数
Note: Does not support concurrent strings, factory to determine the number of strings</td></tr>
<tr><td>☐4S</td><td>☐8S</td><td></td><td>☐其他 Other：_____</td></tr>
<tr><td>额定放电电流
Rated Discharge Current</td><td>☐40A</td><td>☐60A</td><td>☐100A</td><td>☐其他 Other：_____</td></tr>
<tr><td>通讯方式
Communication Mode</td><td colspan="2">☐ Uart</td><td colspan="2">☐Uart+RS485+CAN</td></tr>
<tr><td rowspan="3">选配外置配件
Optional External Accessories</td><td>☐无 No</td><td>☐蓝牙 Bluetooth</td><td>☐WiFi</td><td>☐GPS</td></tr>
<tr><td>☐加热模块
Heating Module</td><td>☐并联模块
Parallel module</td><td>☐蜂鸣器
Buzzer</td><td>☐钥匙开关
Key</td></tr>
<tr><td colspan="2">☐显示屏/灯板 Display：_____</td><td colspan="2">☐其他 Other：_____</td></tr>
</table>

4. 系统框架图(System Framework Diagram)

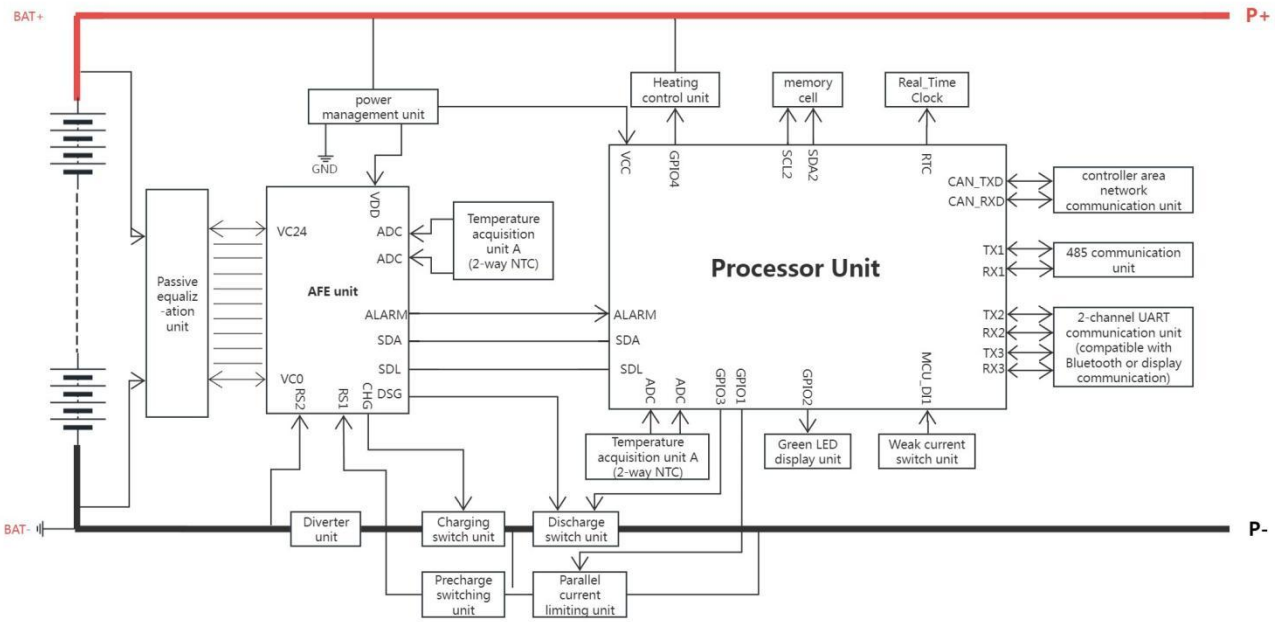

5. 技术参数 (Technical Parameters)

5.1. 充放电及均衡 Charging & Discharging With Passive Equalization

检测内容 Test content		默认参数 Default parameters	单位 Unit	备注 Remark
放电 Discharge	额定放电电流 Rated Discharge Current	40~100	A	
充电 Charge	充电电压 Charge Voltage	3.65*n （n 为电池串数）	V	
	额定充电电流 Rated Charge current	40 ~ 100	A	
被动均衡功能 Passive Equalization	均衡开启电压 Balanced Start Voltage	3.4	V	可设置 Can Be Set
	均衡开启压差 Balanced Opening Voltage Difference	≥20	mV	可设置 Can Be Set
	均衡电流 Balance Current	100±30	mA	
	均衡开启条件为同时满足以下两个条件: Balanced start when both of the following conditions are met: 1、达到设定的均衡开启压差 Reach the set balanced start voltage 2、达到设定的均衡开启电压 The highest voltage reaches the set balanced start voltage difference.			

5.2. 过充保护 Over-Charging Protection

检测内容 Test content		默认参数 Default parameters	单位 Unit	备注 Remark
单体过充告警 Single Cell Over-Charging Alarm	单体过充告警电压（一级） Single Cell Over-Charging Voltage Alarm（First Level）	3.65±0.05	V	可设置 Can Be Set
	单体过充告警解除电压（一级） Single Cell Over-Charging Voltage Alarm Release（First Level）	3.55±0.05	V	
单体过充保护 Single Cell Over-Charging Protection	单体过充保护电压（二级） Single Cell Over-Charging Voltage Protection（Second Level）	3.75±0.05	V	
	单体过充保护解除电压（二级） Single Cell Over-Charging Voltage Protection Recover（Second Level）	3.65±0.05	V	
	单体过充保护电压（三级） Single Cell Over-Charging Voltage Protection(Third Level)	3.80±0.05	V	
	单体过充保护解除电压（三级） Single Cell Over-Charging Voltage Protection Recover(Third Level)	3.70±0.05	V	
总压过充告警 Total Voltage Over-Charging Alarm	总体过充告警电压（一级） Total Voltage Over-Charging Alarm（First Level）	(3.6±0.05)*n	V	可设置 Can Be Set n 为电池串数 n is Battery Strings
	总体过充告警解除电压（一级） Total Voltage Over-Charging Alarm Recover（First Level）	(3.5±0.05)*n	V	
总压过充保护 Total Voltage Over-Charging Protection	总体过充保护电压（二级） Total Voltage Over-Charging Protection（Second Level）	(3.7±0.05)*n	V	
	总体过充保护解除电压（二级） Total Voltage Over-Charging Protection Recover（Second Level）	(3.6±0.05)*n	V	
	总体过充保护电压（三级） Total Voltage Over-Charging Protection(Third Level)	(3.75±0.05)*n	V	
	总体过充保护解除电压（三级） Total Voltage Over-Charging Protection Recover(Third Level)	(3.65±0.05)*n	V	
延时 Delay	单体过充二级延时 Cell Over-Charging Voltag Delay	1±0.8	S	
	单体过充三级延时 Cell Over-Charging Voltag Delay	0.5±0.3	S	
	总压过充二级延时 Total Voltage Over-Charging Delay（Second Level）	1±0.8	S	
	总压过充三级延时 Total Voltage Over-Charging Delay(Third Level)	0.5±0.3	S	

5.3. 过放保护 Over-Discharging Protection

检测内容 Test content		默认参数 Default parameters	单位 Unit	备注 Remark
单体过放告警 Single Cell Over-Discharging Alarm	单体过放告警电压（一级） Single Cell Over-Discharging Voltage Alarm（First Level）	2.3±0.05	V	可设置 Can Be Set
	单体过放告警解除电压（一级） Single Cell Over-Discharging Voltage Alarm Recover（First Level）	2.4±0.05	V	可设置 Can Be Set
单体过放保护	单体过放保护电压（二级）	2.2±0.05	V	可设置

Single Cell Over-Discharging Protection	Single Cell Over-Discharging Voltage Protection（Second Level）			Can Be Set
	单体过放保护解除电压（二级） Single Cell Over-Discharging Voltage Protection Recover（Second Level）	2.3±0.05	V	可设置 Can Be Set
	单体过放保护电压（三级） Single Cell Over-Discharging Voltage Protection (Third Level)	2.1±0.05	V	可设置 Can Be Set
	单体过放保护解除电压（三级） Single Cell Over-Discharging Voltage Protection Recover (Third Level)	2.2±0.05	V	可设置 Can Be Set
总压过放告警 Total Voltage Over-Discharging Alarm	总体过放告警电压（一级） Total Voltage Over-Discharging Alarm（First Level）	(2.35±0.05)*n	V	可设置 Can Be Set n 为电池串数 n is Battery Strings
	总体过放告警解除电压（一级） Total Voltage Over-Discharging Alarm Recover（First Level）	(2.45±0.05)*n	V	
总压过放保护 Total Voltage Over-Discharging Protection	总体过放保护电压（二级） Total Voltage Over-Discharging Protection（Second Level）	(2.25±0.05)*n	V	
	总体过放保护解除电压（二级） Total Voltage Over-Discharging Protection Recover（Second Level）	(2.35±0.05)*n	V	
	总体过放保护电压（三级） Total Voltage Over-Discharging Protection(Third Level)	(2.15±0.05)*n	V	
	总体过放保护解除电压（三级） Total Voltage Over-Discharging Protection Recover(Third Level)	(2.25±0.05)*n	V	
延时 Delay	单体过放二级延时 Cell Over-Charging Voltag Delay（Second Level）	1±0.8	S	
	单体过放三级延时 Cell Over-Charging Voltag Delay(Third Level)	0.5±0.3	S	
	总压过放二级延时 Total Voltage Over-Discharging Delay（Second Level）	1±0.8	S	
	总压过放三级延时 Total Voltage Over-Discharging Delay(Third Level)	0.5±0.3	S	

5.4. 过流保护 Over-Current Protection

持续电流 Continuous Current		充放电过流告警(一级) Charging / Discharging Over-Current Value Alarm (First Level)	充放电过流保护(二级) Charging / Discharging Over-Current Value Protection (Second Level)	充放电过流保护(三级) Charging / Discharging Over-Current Value Protection (Third Level)
充电 Charging	放电 Discharging			
40A	40A	48±3%A (持续电流*1.2 倍)@ Delay 1±0.8s	60±3%A(持续电流*1.5 倍) @ Delay 2±0.8s	80±3%A(持续电流*2 倍) @ Delay 1±0.8s
60A	60A	72±3%A (持续电流*1.2 倍) @ Delay 1±0.8s	90±3%A(持续电流*1.5 倍) @ Delay 2±0.8s	120±3%A (持续电流*2 倍) @ Delay 1±0.8s
100A	100A	120±3%A(持续电流*1.2 倍) @ Delay 1±0.8s	150±3%A(持续电流*1.5 倍) @ Delay 2±0.8s	200±3%A (持续电流*2 倍) @ Delay 1±0.8s
延时 Delay		充放电过流二级延时解除	30±0.8	S
		充放电过流三级延时解除	30±0.8	S
备注 Remark		参数可设置 Can Be Set；		

5.5. 短路保护 Short Circuit Protection

检测内容 Test content	出厂默认参数 Factory default parameters	单位 Unit	备注 Remark

短路保护 Short Circuit Protection	短路保护条件 Short Circuit Protection Conditions	外部负载短路 External load short circuit	A	
	短路保护延时 Short Circuit Protection Delay	10~500	uS	
	说明：短路电流小于最小值或高于最大值可能会造成短路保护失效，不保证有短路保护，也不建议做短路保护测试。实际以客户寄回电池包到我司测试为准。 Note: Short-circuit current less than the minimum value or higher than the maximum value may cause short-circuit protection failure, does not guarantee short-circuit protection, and is not recommended to do short-circuit protection test. It is not recommended to do the short-circuit protection test. The actual test is subject to the customer sending back the battery pack to our company for testing.			
	短路保护解除 Short Circuit Protection Release	移除负载解除/充电解除 Remove Load Release/Charge Release		

5.6. 外部温度保护 Temperature Protection

检测内容 Test content		默认参数 Default parameters	单位 Unit	备注 Remark
充电高温 Charging High Temperature	充电高温告警温度（一级） Charging High Temperature Alarm(First Level)	60±3	℃	
	充电高温告警释放温度（一级） Charging High Temperature Alarm Release(First Level)	55±3	℃	
	充电高温保护温度（二级） Charging High Temperature Protection(Second Level)	65±3	℃	
	充电高温保护释放温度（二级） Charging High Temperature Protection Recover(Second Level)	60±3	℃	
	充电高温保护温度（三级） Charging High Temperature Protection(Third Level)	75±3	℃	
	充电高温保护释放温度（三级） Charging High Temperature Protection Recover(Third Level)	65±3	℃	
放电高温 Discharging High Temperature	放电高温告警温度（一级） Discharging High Temperature Alarm(First Level)	65±3	℃	
	放电高温告警释放温度（一级） Discharging High Temperature Alarm Recover(First Level)	60±3	℃	
	放电高温保护温度（二级） Discharging High Temperature Protection(Second Level)	70±3	℃	
	放电高温保护释放温度（二级） Discharging High Temperature Protection Recover(Second Level)	65±3	℃	
	放电高温保护温度（三级） Discharging High Temperature Protection(Third Level)	75±3	℃	
	放电高温保护释放温度（三级） Discharging High Temperature Protection Recover(Third Level)	70±3	℃	
充电低温保护 Charging Low Temperature Protection	充电低温告警（一级） Charging Low Temperature Alarm (First Level)	-30±3	℃	
	充电低温告警释放温度（一级） Charging Low Temperature Alarm Recover (First Level)	-25±3	℃	

	充电低温保护（二级） Charging Low Temperature Protection (Second Level)	-35±3	℃	
	充电低温保护释放温度（二级） Charging Low Temperature Protection Recover (Second Level)	-30±3	℃	
	充电低温二级保护（三级） Charging Low Temperature Protection(Third Level)	-40±3	℃	
	充电低温保护释放温度（三级） Charging Low Temperature Protection Recover(Third Level)	-35±3	℃	
放电低温保护 Discharging Low Temperature Protection	放电低温告警（一级） Discharging Low Temperature Alarm (First Level)	-30±3	℃	
	放电低温告警释放温度（一级） Discharging Low Temperature Alarm Recover (First Level)	-25±3	℃	
	放电低温保护（二级） Discharging Low Temperature Protection (Second Level)	-35±3	℃	
	放电低温保护释放温度（二级） Discharging Low Temperature Protection Recover (Second Level)	-30±3	℃	
	放电低温保护（三级） Discharging Low Temperature Protection(Third Level)	-40±3	℃	
	放电低温保护释放温度（三级） Discharging Low Temperature Protection Recover(Third Level)	-35±3	℃	
说明 Description	温度告警及二级延时 Temperature Alarm&Delay(First Level/Second Level)	1±0.8	S	
	温度三级延时 Temperature Alarm& Delay(Third Level)	0.5±0.3	S	
	逻辑说明：达到开启条件时，会触发告警或保护，告警不会关闭充放电 MOS，保护时会关闭充放电 MOS。 Logic description: When the open condition is reached, alarm or protection will be triggered, alarm will not turn off the charging/discharging MOS, and protection will turn off the charging/discharging MOS.			

5.7. MOS 温度保护 MOS Temperature Protection

检测内容 Test content		默认参数 Default parameters	单位 Unit	备注 Remark
MOS 温度 MOS Temperature Protection	MOS 高温告警（一级） MOS High Temperature Alarm (First Level)	90±3	℃	
	MOS 高温告警恢复（一级） MOS High Temperature Alarm Release (First Level)	85±3	℃	
	MOS 高温保护（二级） MOS High Temperature Protection (Second Level)	100±3	℃	
	MOS 高温一级保护恢复（二级） MOS High Temperature Protection Release (Second Level)	95±3	℃	
	MOS 高温二级保护（三级） MOS High Temperature Protection(Third Level)	110±3	℃	
	MOS 高温二级保护恢复（三级） MOS High Temperature Protection Release(Third Level)	105±3	℃	
说明	MOS 温度告警及二级延时	1±0.8	S	

Description	MOS Temperature Alarm& Delay(First Level/Second Level)			
	MOS 温度三级延时 MOS Temperature Delay(Third Level)	0.5±0.3	S	
	逻辑说明：达到开启条件时，会触发告警或保护，告警不会关闭充放电 MOS，保护时会关闭充放电 MOS。 Logic description: When the open condition is reached, alarm or protection will be triggered, alarm will not turn off the charging/discharging MOS, and protection will turn off the charging/discharging MOS.			

5.8. 压差告警 Voltage Difference Alarm

检测内容 Test content		默认参数 Default parameters	单位 Unit	备注 Remark
压差告警 Voltage Difference Alarm	压差过大一级告警 Level 1 alarm of excessive differential pressure	0.5	V	可设置 Can be set up
	压差过大二级告警 Excessive differential pressure Level 2 protection	0.8	V	可设置 Can be set up
	压差过大三级告警 Excessive differential pressure Level 3 protection	1	V	可设置 Can be set up
压差告警恢复 Voltage Difference Alarm Recover	压差过大一级告警恢复 Level 1 alarm recovery of excessive differential pressure	0.3	V	可设置 Can be set up
	压差过大二级告警恢复 Excessive differential pressure, level 2 protection recovery	0.5	V	可设置 Can be set up
	压差过大三级告警恢复 Excessive differential pressure, level 3 protection recovery	0.8	V	可设置 Can be set up
延时 Delay	压差告警及二级延时 Excessive differential pressure Alarm& Delay(Second Level)	1±0.8	S	
	压差三级保护延时 Excessive differential pressure Alarm&level 3Protection Delay	0.5±0.3	S	

5.9. 温差告警 Temperature Difference Alarm

检测内容 Test content		默认参数 Default parameters	单位 Unit	备注 Remark
温差告警 Temperature Difference Alarm	温差一级告警 First Level Temperature Difference Alarm	10±2	℃	
	温差一级告警恢复 First Level Temperature Difference Alarm Recover	5±2	℃	
	温差二级告警 Second Level Temperature Difference Alarm	15±2	℃	
	温差二级告警恢复 Second Level Temperature Difference Alarm Recover	10±2	℃	
	温差三级告警 Third Level Temperature Difference Alarm	20±2	℃	
	温差三级告警恢复 Third Level Temperature Difference Alarm Recover	15±2	℃	
延时 Delay	温差告警及二级延时 Temperature Difference pressure Alarm&level 3 Delay	1±0.8	S	

	温差三级保护延时 Temperature Difference level 3Delay	0.5±0.3	S	

5.10. 热失控 Thermal runaway

检测内容 Test content			动作 Action
热失控 Thermal runaway	开启条件一 Opening condition I	单体电压持续下降(每秒下降≥0.1V 判断，持续检测三秒)且瞬时温升过大(参考阈值温度每 2 秒上升 5℃以上判断) The voltage of the single unit drops continuously (≥0.1V per second judgement, continuous detection for three seconds) And the instantaneous temperature rise is too large (reference threshold temperature rises more than 5 ℃ every 2 seconds to judge)	关断充放电 MOS 管，且蜂鸣器(DO1 输出高电平)持续响；上位机报热失控故障； Turn off the charging and discharging MOS tubes, and the buzzer (DO1 output high level) continues to sound; the host computer reports thermal runaway fault;
	开启条件二 Opening condition II	单体电压持续下降(参考阈值为：每秒下降≥0.2V 以上为判断，持续检测三秒)且瞬时温升过大(参考阈值：温度以每 2 秒上升 10℃以上为判断) The voltage of the single unit continues to drop (reference threshold: a drop of ≥0.2V per second or more is judged, and continuous detection for three seconds) and the instantaneous temperature rise is too large (reference threshold: the temperature rises by more than 10 ℃ every 2 seconds as a judgement)	
	开启条件三 Opening condition III	电池温度上升(超过最大工作温度 70℃)且瞬时温升过大(参考阈值：温度以每 2 秒上升 10℃以上为判断) Battery temperature rises (above the maximum operating temperature of 70°C) and the instantaneous temperature rise is too large (reference threshold: the temperature is judged to rise by more than 10°C every 2 seconds)	
	关闭 Turn off	重启 BMS Reboot BMS	解除热失控故障 Deactivating Thermal Runaway Failure

5.11. 性能参数 Reliability Parameter

序号 NO	项 目 Item	条件及参数 condition
1	检测精度 Detection Accuracy	电流检测精度：≤3%FSR（常温下） Current Detection Accuracy: ≤3%FSR (normal temperature)
		电压检测精度：≤15mV（常温下） Voltage Detection Accuracy: ≤15mV (normal temperature)
		温度检测精度：≤2℃（常温下） Temperature detection accuracy: ≤2℃ (normal temperature)
2	信息存储 Information Storage	最大存储 400 条（可配置 512Kb EEPROM）履历信息，含保护时间，当前总电压、电流、温度、SOC 等 Stores up to 400 (Standard configuration 512Kb EEPROM) message of history information, including protection times, current total voltage, current, temperature,

		SOC, etc.
4	工作环境条件 Working Environment Condition	工作温度:-30℃～70℃ Operating Temperature :-30℃ ~ 70℃
		相对湿度:5%～90%RH Relative Humidity :5% ~ 90%RH
5	存储环境条件 Storage Environment Condition	存储温度:-40℃～85℃ Storage Temperature :-40℃ ~ 85℃
		相对湿度:5%～75%RH Relative Humidity :5% ~ 90%RH
6	电池容量低告警（SOC 过低） Battery capacity low alarm	＜10%
7	主回路导通内阻 The main circuit conducts the internal resistance	<20m Ω
8	工作时自耗电电流 Self-consuming electrical current during operation	≤50mA； 注：该电流为常压且无外设配件下 Note: Regular voltage and no peripheral accessories； 注：常压额定功耗为 0.5W，如欠压时，电流约为 60mA。 Note: The rated power consumption is 0.5W at regular voltage, and the self-consumption current is about 60mA if undervoltage.
9	休眠模式自耗电电流 The sleep mode consumes electrical current	<800uA； 注：该电流为常压且无外设配件下 Note: Regular voltage and no peripheral accessories； 注：常压额定功耗为 50mW，如欠压时，电流约为 900uA。 Note: The rated power consumption is 50mW at regular voltage, and the self-consumption current is about 900uA if undervoltage.
10	休眠时间 Sleep time	3600s 注：可设置永不休眠 Note: Can be set to never sleep
11	最大持续外设功率 Maximum power available for external accessories	6W 注：保护板外设供电不能超出此功率值，如超出会损坏保护板 Note: The output power of the BMS for external accessories can not exceed this power value, if exceeded, the BMS will be damaged.

6. 辅助参数(Auxiliary module parameters)

序号 NO	名称 Name	电流 Current	是/否标配 Yes/No standard	备注 Remark
1	并联模块 Parallel module	☑1A 集成 Built in	是 yes	为了并联不损坏，内置恒功率 3W，最大电流 1A； For parallel connection without damage， Built in constant power 3W, maximum current 1A 内置限流：压差越大，电流越小

				Built-in current limiting: the larger the dropout voltage, the smaller the current
		☐5A 外挂 external module	否 no	如需大电流限流，需选择外挂并联模块； If you need high current limiting, you need to choose an external module.
		☐15A 外挂 external module	否 no	

7. 通信说明(Communication Description)

7.1. UART 通讯

默认为达锂 UART 通讯协议，可直接与达锂蓝牙、显示屏、上位机等进行通讯使用，也可定制客户通讯协议；The default communication protocol is UART, which can be used to communicate directly with Bluetooth, display, and host computer, etc., and can also be customised to meet the customer's communication protocol;

7.2. RS485 通讯(选配 optional)

默认达锂 RS485 通讯协议，通过专用通讯盒与指定上位机进行通讯，波特率默认为 9600bps。从而在上位机端察看电池的各种信息，包括电池电压、电流、温度、状态、SOC、及电池生产信息等，可授权登陆后进行参数设置及相应控制操作，支持程序升级功能。(本上位机适用于 Windows 系列平台的 PC 机)。The default is up to the Daly RS485 communication protocol,which communicates with the designated host computer through a special communication box, and the default baud rate is 9600bps. Therefore, various information of the battery can be viewed on the host computer, including battery voltage, current, temperature, state, SOC, and battery production information, etc., parameter settings and corresponding control operations can be performed after login, and the program upgrade function can be supported. (This host computer is suitable for PCs of Windows series platforms).

7.3. CAN 通讯 (选配 optional)

默认达锂 CAN 协议，通信速率为 250KB/S。The default is Daly CAN protocol, and the communication rate is 250 kb/s.

7.4. 蜂鸣器逻辑 Buzzer logic

上位机可以配置蜂鸣器功能，且蜂鸣器需接在 DO1 口；默认逻辑为当充放电温度到达 60℃时，响 1 秒停 1 秒，如此持续进行蜂鸣报警，直到温度小于 60℃。其他逻辑可联系我司业务进行软件定制；Configure a buzzer to enable on the **PC Master** , and The **PC Master** can be configured with buzzer function, and the buzzer should be connected to DO1 port; the default logic is that when the charging and discharging temperature reaches 60℃, it will ring for 1 second and stop for 1 second, and so on continuously beeping the alarm until the temperature is less than 60℃. Other logics can be customized by contacting our business for software;

7.5. 指示灯逻辑 Indicator light logic

本产品有一颗绿色 LED 指示灯灯，对灯语状态如下表。

This product has a green LED light, and the status of the light is shown in the table below：

This product has a green LED light, and the status of the light is shown in the table below：

1	关机、断电、休眠 Shutdown, power outage,hibernation	灯灭 light off
2	工作中，放电状态 During operation, discharge status	灯闪，0.5s 亮，2.5s 灭，3s 为一个周期 The light flashes, turns on for 0.5 seconds, turns off for 2.5 seconds, and takes 3 seconds as a cycle
3	工作中，充电状态 Charging state during operation	灯闪，0.5s 亮，0.5s 灭，1s 为一个周期 The light flashes, turns on for 0.5 seconds, turns off for 0.5 seconds, and takes 1 second as a cycle
4	工作中，无充放电 No charging or discharging during operation	灯闪，0.5s 亮，9.5s 灭，10s 为一个周期 The light flashes, turns on for 0.5 seconds, turns off for 9.5 seconds, and takes 10 seconds as a cycle

7.6. 钥匙开关逻辑 Keyswitch logic

支持钥匙开关控制 MOS 跟休眠，默认为失能，有以下两种可选逻辑通过上位机或出厂配置：

逻辑一：钥匙控制放电 MOS 管；

逻辑二：钥匙控制放电 MOS 管与休眠；
钥匙开关的控制逻辑为正逻辑，也就是开关闭合时才做控制。
其他逻辑可联系我司业务进行软件定制，例如 5V/12V/24 外部电源唤醒，同时控充放电 MOS 等。
Support key switch control MOS to follow the sleep, the default is disable, there are the following two optional logic through the host computer or factory configuration:
Logic one: key control discharge MOS tube;
Logic two: key control discharge MOS tube with hibernation;
The control logic of the key switch is positive logic, that is, the control is done when the switch is closed.
Other logic can contact our business for software customisation, such as 5V/12V/24 external power supply wake-up, simultaneous control of charging and discharging MOS and so on.

8. 上位机说明(PC Master Description)

PC 上位机 (DALY BMS Tool)功能默认显示数据监控界面，登陆界面输入密码并连接上位机通讯后，显示数据监控，参数读写，生产制造，更多等界面。手机 APP 设置保护(二级)参数。
1、解析各模块发送的数据信息，然后将电压、温度、配置值等显示出来；
2、通过上位机向各模块配置信息；
3、生产参数校准,BMS 升级。
The DALY BMS function of the PC software displays the data monitoring interface by default. After entering a password and connecting to the upper computer for communication, the data monitoring, parameter reading and writing, production manufacturing, and more interfaces are displayed.
The mobile app sets protection parameters and synchronizes secondary and tertiary protection.
1.Analyze the data information sent by each module, and then display the voltage, temperature, configuration value, etc.;
2.Configure information to each module through the host computer;
3.Calibration of production parameters,BMS upgrade.

9. 保护板尺寸图(Dimensional Drawing Reference)

主机结构尺寸（不含配件） Dimensions of mainframe structure (without accessories)	长*宽*高 ：125*65*13（mm） Length*Width*Height：125*65*13（mm）

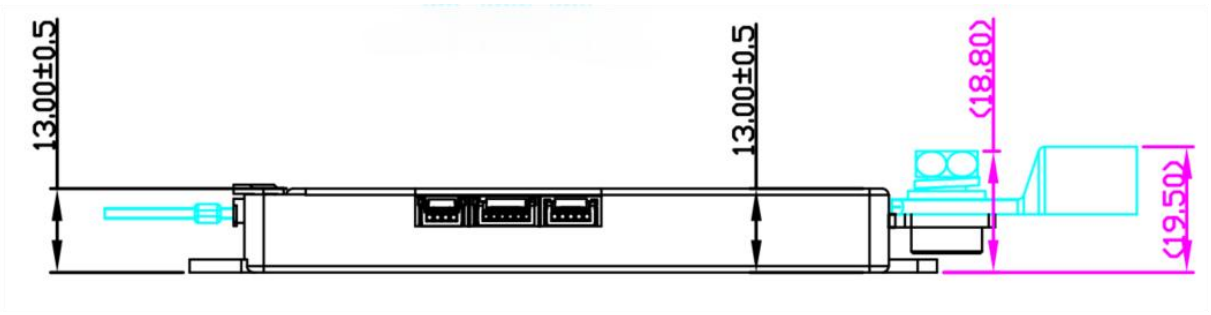

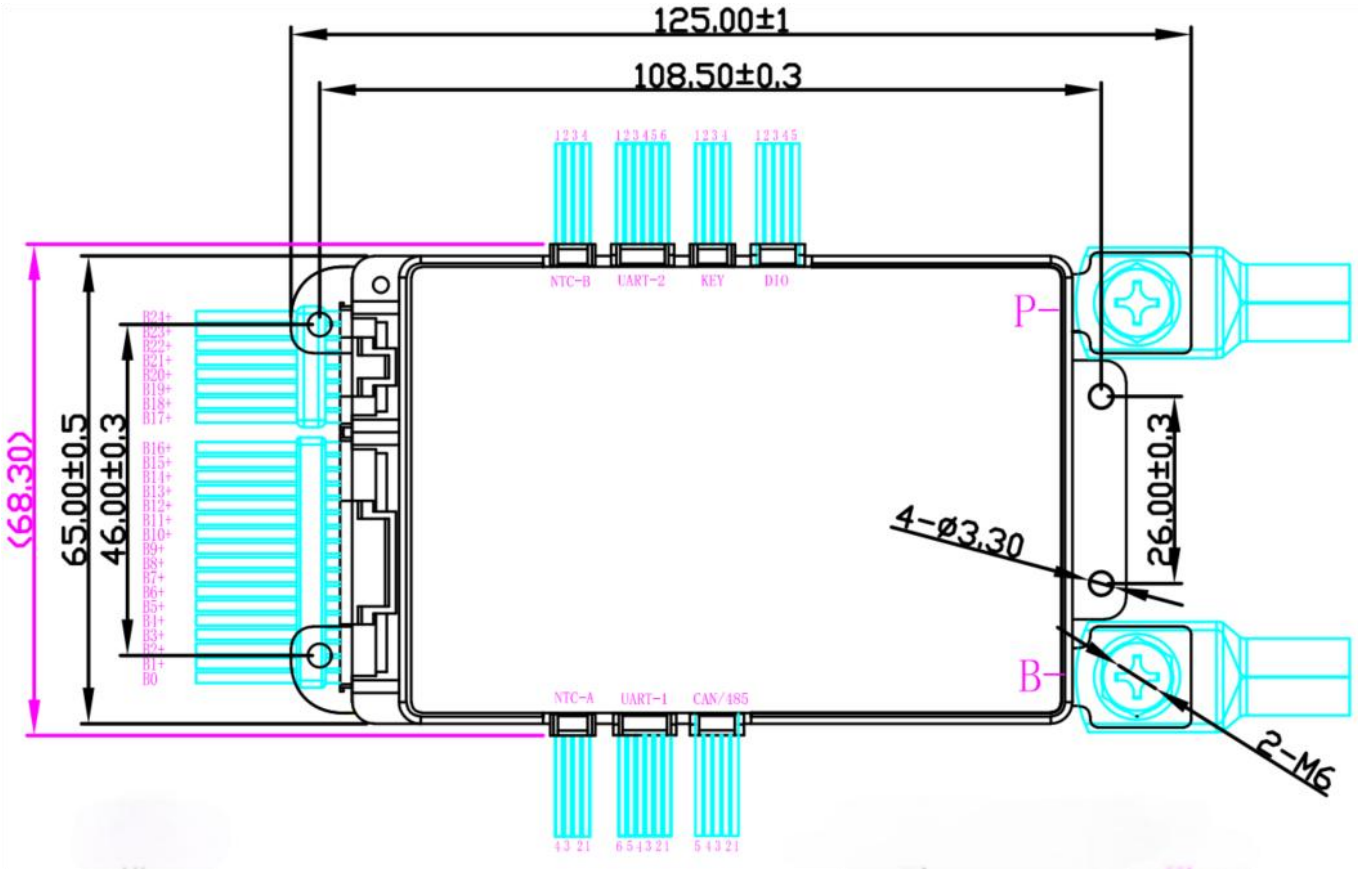

注：示意图为最大串数全功能版本，以实物的配置为准
Note: The schematic is for the maximum number of strings full-featured version, the configuration of the physical object shall prevail

10. 接口定义(Interface Definition)

10.1. 接口引脚说明 Interface pin instructions

接口名称 Interface name	Pin 脚	标号 Label	定义说明 Definition description
B-接口 B-interface	/	B-	电池总负，接电池总负 Battery negative, connect to battery negative
P-接口 P-interface	/	P-	保护板充放电负极，接充放电负端 The charge and discharge negative terminal of the protection board is connected to the negative terminal of the charge and discharge
采样接口 Sampling interface PHB 2.0 带扣	1	B0	接第 1 节电池负级 Connect to the negative terminal of the first battery
	2	B1+	接第 1 节电池正级 Connect to the positive terminal of the first battery
	3	B2+	接第 2 节电池正级 Connect to the positive terminal of the second battery

	...	...	接最后 1 节电池正级 Connect the positive terminal of the last battery
NTC-A 接口 NTC-A interface GH1.25 4Pin	1	NTC-1	1#温度线 1 # Temperature line
	2	GND	地 GND
	3	GND	地 GND
	4	NTC-2	2#温度线 2 # Temperature line
Uart1 接口 Uart1 Interface GH1.25 6Pin	1	GND	地 GND
	2	3.3V	供电电源 3.3V Power supply is 3.3V
	3	12V	供电电源 8-12V Power supply is 8- 12V
	4	S1	激活按键 Activate button（短按 1s 左右 Press about 1 second）
	5	TX	通讯发送端 Communication sending end
	6	RX	通讯接收端 Communication receiving end
Uart2 接口 Uart2 Interface GH1.25 6Pin	1	GND	地 GND
	2	3.3V	供电电源 3.3V Power supply is 3.3V
	3	12V	供电电源 8-12V Power supply is 8- 12V
	4	S1	激活按键 Activate button（短按 1s 左右 Press about 1 second）
	5	TX	通讯发送端 Communication sending end
	6	RX	通讯接收端 Communication receiving end
RS485/CAN 接口 （选配） RS485/CAN interface （Optional） GH1.25 5Pin	1	485_B	485 通讯接收端 485 communication receiver
	2	485_A	485 通讯发送端 485 communication sender
	3	ISO_GND	隔离地 Isolation ground GND
	4	CAN_H	CAN 通讯高 CAN communication high
	5	CAN_L	CAN 通讯低 CAN communication low
NTC-B 接口 （选配） NTC-B interface （Optional） GH1.25 4Pin	1	NTC-3	3#温度线 3 # Temperature line
	2	GND	地 GND
	3	GND	地 GND
	4	NTC-4	4#温度线 4 # Temperature line
KEY 接口 （选配） KEY interface （Optional） GH1.25 4Pin	1	KEY-	钥匙开关负 Key switch negative
	2	TBD	/
	3	TBD	/
	4	KEY+	钥匙开关正 Key switch positive
DIO 接口 DIO parallel interface GH1.25 5Pin	1	DO1	12V ≤500mA DO
	2	GND	地 GND
	3	DI	预留 TBD
	4	GND	地 GND
	5	DO2	3.3V ≤200mA DO

10.2. 主要线材说明 Description of main wires

线材名称 Line name	默认规格 Default specification	选配规格 Optional specifications
NTC 线 NTC line	28AWG L=250mm GH1.25	L=500mm 、L=700mm、L=900mm

CAN/485 线 CAN/485 line	无	26AWG L=300mm GH1.25
B- P-线	M6 螺母端子，不带线 M6 Nut Terminal, No line.	M6_SC16-5_3512 L=100mm
采样线 Sampling line	参考如下”表格 10.3”(Sheet 10.3)	L=300mm 、L=350mm、L=450mm

10.3. 采集与串数对应表 Collection and string number map

表格 10.3 Sheet 10.3

串数 Strings	采集线接口规格 collecting cable interface specification	采集线规格 collecting cable specification	采集线抽线 collecting cable cutting
3S	PHB2.0 4pin with buckle	1007 24AWG L=300mm（4PIN）with buckle	/
4S	PHB2.0 5pin with buckle	1007 24AWG L=300mm（5PIN）with buckle	/
5S	PHB2.0 6pin with buckle	1007 24AWG L=300mm（6PIN）with buckle	/
6S	PHB2.0 7pin with buckle	1007 24AWG L=300mm（7PIN）with buckle	/
7S	PHB2.0 8pin with buckle	1007 24AWG L=350mm（8PIN）with buckle	/
8S	PHB2.0 9pin with buckle	1007 24AWG L=450mm（9PIN）with buckle	/
9S	PHB2.0 11pin with buckle	1007 24AWG L=450mm（11PIN）with buckle	抽掉 11P 中的第一根红线 cutting the first red cable of the 11PIN cable
10S	PHB2.0 11pin with buckle	1007 24AWG L=450mm（11PIN）with buckle	/

11. 保修(Warranty)

本公司生产的所有锂电池保护板，质保一年；人为因素导致损坏的，有偿维修。

All lithium battery BMS produced by our company has one-year warranty; if the damage caused by human factors, paid maintenanc.

12. 接线使用说明及 APP 下载 (Wiring instructions and APP downloads)

扫码查看说明书及下载 APP，或使用电脑浏览器登录：https://www.dalyelec.com/service.html

Scan the QRcode using the browser to view the user manual and download APP， or use a computer browser to access this website: https://www.dalyelec.com/service.html

13. 注意事项(Precautions)

13.1. 不同电压平台的保护板不能混用，如三元类保护板不能使用铁锂电池上；BMS of different voltage platforms cannot be mixed. For example, NMC BMSs cannot be used on LFP batteries.
13.2. 不同厂家的排线不通用，请确保使用我们公司配套排线；The cables of different manufacturers are not universal, please make sure to use our company's matching cables
13.3. 在测试、安装、接触和使用保护板时，要做好防静电措施；Take measures to discharge static electricity when testing, installing, touching and using the BMS
13.4. 不要使保护板的散热面直接接触电芯，否则热量会传送到电芯，影响电池的安全；Do not let the heat dissipation surface of the BMS directly contact the battery cells, otherwise the heat will be transferred to the battery cells and affect the safety of the battery
13.5. 不可自行拆卸、更改保护板元器件；Do not disassemble or change BMS components by yourself
13.6. 组装作业中避免散热片与电芯、镍带接触； Avoid contact between the heat sink and the battery core and nickel strip during assembly operations.
13.7. 如果保护板出现异常，请停止使用，等问题解决了再使用；If the BMS is abnormal, please stop using it and use it after the problem is solved
13.8. 插拔针座连接线，注意按压卡扣位拔插，否则可能造成线材损坏；Plug and unplug the connector cable, pay attention to press the buckle position to unplug and unplug, otherwise the wire may be damaged.
13.9. 当电池为 4、5 串铁锂时，保护板的 Uart 及 DO 的 12V 电压不会稳压输出，会根据电池总压变化，实际电压值会略低于电池总压。故欠压时，涉及的 12V 输出的配件会因供电不足而无法使用，例如 WIFI 模块、4G 模块等；When the battery is 4、5strings of LiFePO4, the 12V voltage of the Uart and DO of the BMS does not regulate the voltage output, and the actual voltage value will be slightly lower than the total battery voltage according to the total battery voltage change. Therefore, in the case of undervoltage, accessories with 12V output will be unable to be used due to insufficient power supply, such as WIFI module, 4G module, etc.
13.10. 通过外接设备按键激活唤醒保护板时，需要短按 1s 左右. To activate the wake up BMS by pressing a button on an external device, please press for about 1 second.

14. 特别说明(Special Note)

我司产品进行严格的出厂检验测试，但是因为客户使用的环境不同（特别是在高温、超低温、太阳下等），难免会出现保护板故障，所以客户在选择和使用保护板时，需要在友好的环境下使用及选择一定冗余量的保护板。

Our products undergo strict factory inspection and testing, but due to the different environments used by customers (especially in high temperature, ultra-low temperature, under the sun, etc.), it is inevitable that the protection board will fail. Therefore, when customers choose and use BMS, they need to be in a friendly environment, and select a BMS with a certain redundancy capability.

产品更改说明

Product change Instructions

版本 （Version）	更改内容 （Change content）	更改人 （Editor）	更改日期 （Change date）
A0	首版	**Yang Weihao**	**2023/12/10**
A1	**修改尺寸图、温度保护参数、4 串及低压时 12V 的说明 Modify the dimensional drawing, temperature protection parameters, 4 strings, and instructions for 12V at low voltage**	**Yang Weihao**	**2024/3/18**

A2	更新 100A 的尺寸图、增加采集与串数对应表 Updated the dimensional chart of 100A and added the corresponding table for the number of acquisitions and strings	Zhao Xihao	2024/4/18
A3	修订接口描述 Revised interface description	Zhao Xihao	2024/5/2
A4	合并串数，区分电池类型及板型； 修改接线及使用说明，改为二维码及网址链接形式；Combine the number of strings to distinguish between battery types and plate types; Modify the wiring and instructions to change to QR code and URL link;	Yang Weihao	2024/12/30
A5	增加按键激活唤醒保护板的说明 Added instructions for button activation of the wake-up protection plate	Mo Yepeng	2025/3/7
A6	均衡电流单位/延时/过流保护/外部温度保护参数/7S 采集线长度更新 Balanced current unit/delay/overcurrent protection/external temperature protection parameters/7S acquisition line length update	HM Jiang	2025/4/1
A7	参数迭代 Parameter iteration	HM Jiang	2025/5/13
A8	纠正产品名称 Correct product names	HM Jiang	2025/5/28
A9	增加辅助参数备注：内置限流：压差越大，电流越小 Built-in current limiting: the larger the dropout voltage, the smaller the current	HM Jiang	2025/6/30
A8	纠正 KEY 接口定义 Correct KEY interface definition	HM Jiang	2025/12/3