产品规格承认书

Product Specification Approval

产品名称（**Product Name**）：	智能板 7~24 兼串 30~60A 同口带均衡 Smart BMS 7~24S 30~60A Common Port With Balance	
产品型号（**Product Number**）：	DL-R24YH-TZJ	
客 户 名（**Customer Name**）：		
客户料号（**Customer P/N**）：		
送样日期 **Sample Delivery Date**	版次 **Version**	文件编号 **Document No.**
	A3	
编制(Prepared by)	**核准(Approved)**	**审核(Audit)**
Zhao Xihao	**Yang Weihao**	**Yan Lianhong**
客户确认栏 **Customer Confirmation Column**		
确认意见 Confirm opinion： **客户签章 Customer signature:** **日期 Date:**		

注意（Notice）：

1.收到样机确认 OK 后请及时回签，7 天内没有回签及问题反馈，我司默认客户测试合格；规格书中的图片为通用机型图片，可能与送样样机有差异，此份规格书达锂电子保留最终解释权.After receiving the prototype to confirm OK, please sign back in a timely manner, within 7 days without signing back and problem feedback, our default customer test qualified; specifications in the picture for the general model picture, may be different from the delivery of the prototype, this specification by the Dongguan Daly Electronics Co.

2.客户批量前，请在规格书中签字回传，并说明详细功能说明，我司才安排批量.Before the customer batches, please sign the specification and return it, and explain the detailed function description, and our company will arrange the batch.

目录

1. 简介 (Introduction) 3
2. 产品概述及特点(Product Overview and Features) 3
3. 基础规格(Basic specification) 3
4. 技术参数 (Technical Parameters) 4
4.1. 充放电及均衡 Charging & Discharging With Passive Equalization 4
4.2. 单体电压保护 Single cell voltage Protection 5
4.3. 总压保护 Total Voltage Protection 5
4.4. 充电过流保护 Charging Over-Current Protection 6
4.5. 放电过流保护 Discharging Over-Current Protection 6
4.6. 短路保护 Short Circuit Protection 7
4.7. 外部温度保护 Temperature Protection 7
4.8. MOS 温度保护 MOS Temperature Protection 8
4.9. 压差告警 Voltage Difference Alarm 8
4.10. 温差告警 Temperature Difference Alarm 9
4.11. 热失控 Thermal runaway 9
4.12. 性能参数 Reliability Parameter 9
5. 通信说明(Communication Description) 10
5.1. UART 通讯 10
5.2. RS485 通讯(选配 optional) 10
5.3. 蜂鸣器逻辑 Buzzer logic 11
6. 上位机说明(PC Master Description) 11
7. 保护板尺寸图(Dimensional Drawing Reference) 11
8. 接口定义(Interface Definition) 12
8.1. 接口引脚说明 Interface pin instructions 12
8.2. 主要线材说明 Description of main wires 13
9. 接线使用说明及 APP 下载 (Wiring instructions and APP downloads) 13
10. 保修(Warranty) 14
11. 注意事项(Precautions) 14
12. 特别说明(Special Note) 15

1. 简介 (Introduction)

随着锂电池在锂电行业的广泛应用，对电池管理系统也提出了高性能、高可靠性及高性价比等要求。本产品是专门针对锂电池设计的 BMS，它能够实时采集、处理和存储电池组在使用过程中的信息数据，保证电池组的安全性、可用性和稳定性。

With the wide application of lithium batteries in the lithium industry, the battery management system also puts forward the requirements of high performance, high reliability and high cost-effective. This product is specially designed for lithium battery BMS, it can real-time acquisition, processing and storage of battery pack information data in the process of use, to ensure the safety, availability and stability of the battery pack.

2. 产品概述及特点(Product Overview and Features)

- 使用专业大电流走线设计及工艺，能经受超大电流冲击
  Using professional high-current trace design and technology, it can withstand the impact of ultra-large current
- 具有防尘、防震、防挤压等防护功能
  dust proof, shockproof, anti-squeezing and other protective functions
- 有完整的过充、过放、过流、短路、均衡功能
  There are complete over charge, over-discharge, over-current, short circuit, equalization functions
- 采用集成化的设计，将采集、管理、通信等功能集成于一体
  The integrated design integrates acquisition, management, communication and other functions into one
- 具有通讯功能，可通过上位机对过充、过放、过流、充放电过流、均衡、过温、欠温、休眠、容量等参数进行设置
  With communication function, parameters such as over charge, over-discharge, over-current, charge-discharge over-current, equalization, over-temperature, under-temperature, sleep, capacity and other parameters can be set through the host computer

3. 基础规格(Basic specification)

指标 Index	参数 Specification	备注 Remarks
电池组类型 Battery pack type	三元、铁锂 NCM、LFP	
电池组串数 Number of battery strings	三元（NCM）：7~20S 铁锂(LFP)：8~24S	
单体采样电压范围 Cell sampling voltage range	1.5V-4.9V	
工作电压范围 Operating voltage range	＞10V	
均衡方式 Balance method	被动均衡 Passive Balance	
工作功耗 Working power consumption	≤10mA； 注：该电流为常压且无外设配件下	空载状态 Idle State

	Note: Regular voltage and no peripheral accessories; 注：极限功耗为 0.4W，如欠压时，电流约为 20mA。 Note: The rated power consumption is 0.5W at regular voltage, and the self-consumption current is about 60mA if undervoltage.	
休眠功耗 Sleep current	<600uA; 注：该电流为常压且无外设配件下 Note: Regular voltage and no peripheral accessories; 注：极限功耗为 45mW，如欠压时，电流约为 900uA。 Note: The rated power consumption is 50mW at regular voltage, and the self-consumption current is about 900uA if undervoltage.	空载状态 Idle State
产品重量 Product weight	130±5g	
产品尺寸 Product size	长*宽*高 ：101.1*65.5*14.2（mm） Length*Width*Height：101.1*65.5*14.2（mm）	
预充大小（uF）Precharge size	☐4700 ☐10000 ☑22000 ☐33000	并 25R 电阻
二次保护（选配） Secondary protection	使用三端保险丝用来保证二次保护功能 逻辑：当保护板 mos 管闭合时检测到电流,时间超过 30s.三段保险丝熔断保护 Using a three-terminal fuse to ensure the secondary protection function. Logic: When current is detected with the protection board MOSFET closed, and the duration exceeds 30 seconds, the three-terminal fuse will blow to provide protection.	
	注意：此保护不可逆 Note: This protection is irreversible.	

4. 技术参数 (Technical Parameters)

4.1. 充放电及均衡 Charging & Discharging With Passive Equalization

检测内容 Test content		默认参数 Default parameters	单位 Unit	备注 Remark
放电 Discharge	额定放电电流 Rated Discharge Current	30/40/60	A	
充电 charge	额定充电电流 Rated Charge current	30/40/60	A	
被动均衡功能 Passive Equalization	均衡开启电压 Balanced Start Voltage	3.4	V	可设置 Can Be Set
	均衡开启压差 Balanced Opening Voltage Difference	≥20	mV	可设置 Can Be Set
	均衡电流 Balance Current	100±30	mA	
	均衡开启条件为同时满足以下两个条件: Balanced start when both of the following conditions are met: 1、达到设定的均衡开启压差 Reach the set balanced start voltage 2、达到设定的均衡开启电压 The highest voltage reaches the set balanced start voltage difference.			

4.2. 单体电压保护 Single cell voltage Protection

电压保护参数 Voltage Protection parameters	电池类型 Battery Type	
	三元 NCM	铁锂 LFP
单体过压一级告警（V） Single cell over-voltage level 1 alarm (V)	4.15±0.05	3.60±0.05
单体过压一级告警恢复（V） Single cell over-voltage level 1 alarm recovery (V)	4.05±0.05	3.50±0.05
单体过压一级延时 Single cell over-voltage Level 1 delay	1±0.8s	
单体过压二级保护（V） Single cell over-voltage level 2 protection (V)	4.25±0.05	3.70±0.05
单体过压二级保护恢复（V） Single cell over-voltage level 2 protection recovery (V)	4.15±0.05	3.60±0.05
单体过压二级保护延时 Single cell over-voltage Level 2 delay	1±0.8s	
单体过压三级保护（V） Single cell over-voltage level 3 protection (V)	4.30±0.05	3.75±0.05
单体过压三级保护恢复（V） Single cell over-voltage level 3 protection recovery (V)	4.20±0.05	3.65±0.05
单体过压三级保护延时 Single cell over-voltage Level 3 delay	0.5±0.4s	
单体欠压一级告警（V） Single cell under-voltage level 1 alarm (V)	2.80±0.05	2.30±0.05
单体欠压一级告警恢复（V） Single cell under-voltage level 1 alarm recovery (V)	2.90±0.05	2.40±0.05
单体欠压一级延时 Single cell under-voltage Level 1 delay	1±0.8s	
单体欠压二级保护（V） Single cell under-voltage level2 protection (V)	2.70±0.05	2.20±0.05
单体欠压二级保护恢复（V） Single cell under-voltage level 2 protection recovery (V)	2.80±0.05	2.30±0.05
单体欠压二级延时 Single cell under-voltage Level 2 delay	5±0.8s	
单体欠压三级保护（V） Single cell under-voltage level 3 protection (V)	2.60±0.05	2.10±0.05
单体欠压三级保护恢复（V） Single cell under-voltage level 3 protection recovery (V)	2.70±0.05	2.20±0.05
单体欠压三级延时 Single cell under-voltage Level 3 delay	3±0.8s	
一级&二级保护延时 Level 1& Level 2 Protection delay	1±0.8s	
三级保护延时 Level 3 Protection delay	0.5±0.4s	
注：保护参数可被设置，恢复及延时参数不可设置； Note: Protection parameters can be set, recovery and delay parameters cannot be set;		

4.3. 总压保护 Total Voltage Protection

总压保护参数 Voltage Protection parameters	电池类型 Battery Type	
	三元 NCM	铁锂 LFP
过充告警电压（一级）Over-Charging Alarm（First Level）	（4.15-0.05）*N	（3.6-0.05）*N
过充告警解除电压（一级）Over-Charging Alarm Recover（First Level）	（4.05-0.05）*N	（3.5-0.05）*N
过充保护一级延时 Over-Charging Level 1 delay	1±0.8s	
过充保护电压（二级）Over-Charging Protection（Second Level）	（4.25-0.05）*N	（3.7-0.05）*N

过充保护解除电压（二级）Over-Charging Protection Recover（Second Level）	（4.1-0.05）*N	（3.6-0.05）*N
过充保护二级延时 Over-Charging Level 2 delay	1±0.8s	
过充保护电压（三级）Over-Charging Protection(Level 3)	（4.3-0.05）*N	（3.75-0.05）*N
过充保护解除电压（三级）Over-Charging Protection Recover(Level 3)	（4.2-0.05）*N	（3.65-0.05）*N
过充保护三级延时 Over-Charging Level 2 delay	0.5±0.4s	
过放告警电压（一级）Over-Discharging Alarm（First Level）	（2.8+0.05）*N	（2.3+0.05）*N
过放告警解除电压（一级）Over-Discharging Alarm Recover（First Level）	（2.9+0.05）*N	（2.4+0.05）*N
过放保护一级延时 Over-Discharging Level 1 delay	1±0.8s	
过放保护电压（二级）Over-Discharging Protection（Second Level）	（2.7+0.05）*N	（2.2+0.05）*N
过放保护解除电压（二级）Over-Discharging Protection Recover（Second Level）	（2.8+0.05）*N	（2.3+0.05）*N
过放保护二级延时 Over-Discharging Level 2 delay	5±0.8s	
过放保护电压（三级）Over-Discharging Protection(Level 3)	（2.6+0.05）*N	（2.1+0.05）*N
过放保护解除电压（三级）Over-Discharging Protection Recover(Level 3)	（2.7+0.05）*N	（2.2+0.05）*N
过放保护三级延时 Over-Discharging Level 3 delay	3±0.8s	
一级&二级保护延时 Level 1& Level 2 Protection delay	1±0.8s	
三级保护延时 Level 3 Protection delay	0.5±0.4s	
注：1、保护参数可被设置，恢复及延时参数不可设置；2、N 为电池串数； Note: 1、Protection parameters can be set, recovery and delay parameters cannot be set;2、N is the number of battery strings;		

4.4. 充电过流保护 Charging Over-Current Protection

持续电流 Continuous Current 充电 Charging	充电过流告警(一级) Charging Over-Current Value Alarm (Level 1)	充电过流保护(二级) Charging Over-Current Value Protection (Level 2)	充电过流保护(三级) Charging Over-Current Value Protection （Third Level）
30A	36±3%A @ Delay 1±0.8s	45±3%A @ Delay 25±0.8s	60±3%A @ Delay 0.5±0.8s
40A	48±3%A @ Delay 1±0.8s	60±3%A @ Delay 25±0.8s	80±3%A @ Delay 0.5±0.8s
60A	72±3%A @ Delay 1±0.8s	90±3%A @ Delay 25±0.8s	120±3%A @ Delay 0.5±0.8s
备注 Remark	1、参数可设置 Can Be Set； 2、充电过流保护解除条件：移除充电器 Charging Over-Current Protection Recover condition：Remove the charger		

4.5. 放电过流保护 Discharging Over-Current Protection

持续电流 Continuous Current 放电 Discharging	放电过流告警(一级) Discharging Over-Current Value Alarm (Level 1)	放电过流保护(二级) Discharging Over-Current Value Protection (Level 2)	放电过流保护(三级) Discharging Over-Current Value Protection （Third Level）
30A	36±3%A @ Delay 1±0.8s	45±3%A @ Delay 10±0.8s	90±3%A @ Delay 1±0.8s
40A	48±3%A @ Delay 1±0.8s	60±3%A @ Delay 10±0.8s	120±3%A @ Delay 1±0.8s

60A	72±3%A @ Delay 1±0.8s	90±3%A @ Delay 10±0.8s	180±3%A @ Delay 1±0.8s
保护解除延迟 Protection Release Delay	只告警不保护 Alarm only, no protection	30S	30S
备注 Remark	1、参数可设置 Can Be Set； 2、放电过流保护解除条件：移除负载 Discharging Over-Current Protection Recover condition：Remove the load 3、过流保护后 Try 5 次后锁定 Lock after 5 attempts		

4.6. 短路保护 Short Circuit Protection

检测内容 Test content		默认参数 Default parameters	单位 Unit
短路保护 Short Circuit Protection	短路保护条件 Short Circuit Protection Conditions	外部负载短路 External load short circuit	A
	短路保护延时 Short Circuit Protection Delay	10~500	uS
	说明：短路电流小于最小值或高于最大值可能会造成短路保护失效，不保证有短路保护，也不建议做短路保护测试。实际以客户寄回电池包到我司测试为准。Note: Short-circuit current less than the minimum value or higher than the maximum value may cause short-circuit protection failure, does not guarantee short-circuit protection, and is not recommended to do short-circuit protection test. It is not recommended to do the short-circuit protection test. The actual test is subject to the customer sending back the battery pack to our company for testing.		
	解除条件 Release Condition	移除负载解除/充电解除 Remove Load Release/Charging Release	

4.7. 外部温度保护 Temperature Protection

检测内容 Test content		默认参数 Default parameters	单位 Unit
充电高温 Charging High Temperature	充电高温告警温度（一级）Charging High Temperature Alarm(Level 1)	60±3	℃
	充电高温告警释放温度（一级）Charging High Temperature Alarm Release(Level 1)	55±3	℃
	充电高温保护温度（二级）Charging High Temperature Protection(Level 2)	65±3	℃
	充电高温保护释放温度（二级）Charging High Temperature Protection Recover(Level 2)	60±3	℃
	充电高温保护温度（三级）Charging High Temperature Protection(Level 3)	75±3	℃
	充电高温保护释放温度（三级）Charging High Temperature Protection Recover(Level 3)	70±3	℃
放电高温 Discharging High Temperature	放电高温告警温度（一级）Discharging High Temperature Alarm(Level 1)	65±3	℃
	放电高温告警释放温度（一级）Discharging High Temperature Alarm Recover(Level 1)	60±3	℃
	放电高温保护温度（二级）Discharging High Temperature Protection(Level 2)	70±3	℃
	放电高温保护释放温度（二级）Discharging High Temperature Protection Recover(Level 2)	65±3	℃
	放电高温保护温度（三级）Discharging High Temperature Protection(Level 3)	75±3	℃
	放电高温保护释放温度（三级）Discharging High Temperature Protection Recover(Level 3)	70±3	℃
充电低温 Charging Low Temperature	充电低温告警（一级）Charging Low Temperature Alarm (Level 1)	-30±3	℃
	充电低温告警释放温度（一级）Charging Low Temperature Alarm Recover (Level 1)	-25±3	℃
	充电低温保护（二级）Charging Low Temperature Protection (Level 2)	-35±3	℃
	充电低温保护释放温度（二级）Charging Low Temperature Protection Recover (Level 2)	-30±3	℃
	充电低温二级保护（三级）Charging Low Temperature Protection(Level 3)	-40±3	℃
	充电低温保护释放温度（三级）Charging Low Temperature Protection Recover(Level 3)	-35±3	℃
放电低温	放电低温告警（一级）Discharging Low Temperature Alarm (Level 1)	-30±3	℃

Discharging Low Temperature	放电低温告警释放温度（一级）Discharging Low Temperature Alarm Recover (Level 1)	-25±3	℃
	放电低温保护（二级）Discharging Low Temperature Protection (Level 2)	-35±3	℃
	放电低温保护释放温度（二级）Discharging Low Temperature Protection Recover (Level 2)	-30±3	℃
	放电低温保护（三级）Discharging Low Temperature Protection(Level 3)	-40±3	℃
	放电低温保护释放温度（三级）Discharging Low Temperature Protection Recover(Level 3)	-35±3	℃
说明 Description	一级&二级温度告警及保护延时 Level1&Leve2 Temperature Alarm&Protection Delay	1±0.8	S
	三级温度告警及保护延时 Leve3 Temperature Alarm&Protection Delay	0.5±0.4	S
	逻辑说明：达到开启条件时，会触发告警或保护，告警不会关闭充放电 MOS，保护时会关闭充放电 MOS。 Logic description: When the open condition is reached, alarm or protection will be triggered, alarm will not turn off the charging/discharging MOS, and protection will turn off the charging/discharging MOS.		

注：1、以上参数可设置；Note: 1, the above parameters can be set;

4.8. MOS 温度保护 MOS Temperature Protection

检测内容 Test content		默认参数 Default parameters	单位 Unit
MOS 温度 MOS Temperature	高温告警（一级）High Temperature Alarm (Level 1)	90±3	℃
	高温告警恢复（一级）High Temperature Alarm Release (Level 1)	85±3	℃
	高温保护（二级）High Temperature Protection (Level 2)	100±3	℃
	高温一级保护恢复（二级）High Temperature Protection Release (Level 2)	95±3	℃
	高温二级保护（三级 High Temperature Protection(Level 3)	110±3	℃
	高温二级保护恢复（三级）High Temperature Protection Release(Level 3)	105±3	℃
说明 Description	一级&二级温度告警及保护延时 Level1&Leve2 High Temperature Alarm&Protection Delay	1±0.8	S
	三级温度告警及保护延时 High Temperature Alarm&Protection Delay	0.5±0.4	S
	逻辑说明：达到开启条件时，会触发告警或保护，告警不会关闭充放电 MOS，保护时会关闭充放电 MOS。 Logic description: When the open condition is reached, alarm or protection will be triggered, alarm will not turn off the charging/discharging MOS, and protection will turn off the charging/discharging MOS.		

注：1、以上参数可设置；Note: 1, the above parameters can be set;

4.9. 压差告警 Voltage Difference Alarm

检测内容 Test content		默认参数 Default parameters	单位 Unit
压差告警 Voltage Difference Alarm	压差过大一级告警 Level 1 alarm of excessive differential pressure	0.5	V
	压差过大二级告警 Excessive differential pressure Level 2 protection	0.8	V
	压差过大三级告警 Excessive differential pressure Level 3 protection	1	V
	压差过大一级告警恢复 Level 1 alarm recovery of excessive differential pressure	0.3	V
	压差过大二级告警恢复 Excessive differential pressure, level 2 protection recovery	0.5	V
	压差过大三级告警恢复 Excessive differential pressure, level 3 protection recovery	0.8	V
延时 Delay	一级&二级压差告警及保护延时 Level 1&level 2 Excessive differential pressure Alarm&Protection Delay	1±0.8	S
	三级压差告警及保护延时 Level 3 Excessive differential pressure Alarm&Protection	0.5±0.4	S

	Delay		

注：1、以上参数可设置；Note: 1, the above parameters can be set;

4.10. 温差告警 Temperature Difference Alarm

检测内容 Test content		默认参数 Default parameters	单位 Unit
温差告警 Temperature Difference Alarm	温差一级告警 First Level Temperature Difference Alarm	10±2	℃
	温差一级告警恢复 First Level Temperature Difference Alarm Recover	5±2	℃
	温差二级告警 Second Level Temperature Difference Alarm	15±2	℃
	温差二级告警恢复 Second Level Temperature Difference Alarm Recover	10±2	℃
	温差三级告警 Third Level Temperature Difference Alarm	20±2	℃
	温差三级告警恢复 Third Level Temperature Difference Alarm Recover	15±2	℃
延时 Delay	一级&二级温差告警延时 Level 1&level 2 Temperature Difference Alarm Delay	1±0.8	S
	三级温差告警延时 Level 3 Temperature Difference Alarm Delay	0.5±0.4	S

注：1、以上参数可设置；Note: 1, the above parameters can be set;

4.11. 热失控 Thermal runaway

热失控 Thermal runaway		
检测内容 Test content		动作 Action
开启条件一 Opening condition I	单体电压持续下降(每秒下降≥0.1V 判断，持续检测三秒)，且瞬时温升过大(参考阈值温度每 2 秒上升 5℃以上判断) The voltage of the single unit drops continuously (≥0.1V per second judgement, continuous detection for three seconds)，And the instantaneous temperature rise is too large (reference threshold temperature rises more than 5 ℃ every 2 seconds to judge)	关断充放电 MOS 管，且蜂鸣器(DO1 输出高电平)持续响；上位机报热失控故障； Turn off the charging and discharging MOS tubes, and the buzzer (DO1 output high level) continues to sound; the host computer reports thermal runaway fault;
开启条件二 Opening condition II	单体电压持续下降(参考阈值为：每秒下降≥0.2V 以上为判断，持续检测三秒)且瞬时温升过大(参考阈值：温度以每 2 秒上升 10℃以上为判断) The voltage of the single unit continues to drop (reference threshold: a drop of ≥0.2V per second or more is judged, and continuous detection for three seconds) and the instantaneous temperature rise is too large (reference threshold: the temperature rises by more than 10 ℃ every 2 seconds as a judgement)	
开启条件三 Opening condition III	电池温度上升(超过最大工作温度 70℃)且瞬时温升过大(参考阈值：温度以每 2 秒上升 10℃以上为判断) Battery temperature rises (above the maximum operating temperature of 70°C) and the instantaneous temperature rise is too large (reference threshold: the temperature is judged to rise by more than 10°C every 2 seconds)	
关闭 Turn off	重启 BMS Reboot BMS	解除热失控故障 Deactivating Thermal Runaway Failure

4.12. 性能参数 Reliability Parameter

序号	项 目	条 件

1	检测精度 Detection Accuracy	电流检测精度：≤3%FSR（常温下） Current Detection Accuracy: ≤3%FSR (normal temperature)
		电压检测精度：≤10mV（常温下） Voltage Detection Accuracy: ≤10mV (normal temperature)
		温度检测精度：≤2℃（常温下） Temperature detection accuracy: ≤2℃ (normal temperature)
2	信息存储 Information storage	历史故障读取 100 条 Read 100 history faults
3	SOC 计量 measurement	采用电流积分 uses current integration
4	休眠时间 Sleep time	3600s 注：可设置永不休眠 Note: Can be set to never sleep
5	短路 Short circuit	电池包短路电流超过系统参数的短路电流，使用空气开关短路 5 次，且能正常恢复。短路回路线长不超过 1.2m，回路内阻低于 20mΩ The short-circuit current of the battery pack exceeds the short-circuit current of the system parameters. Use an air switch to short-circuit 5 times and recover normally. The length of the short-circuit loop should not exceed 1.2m, and the internal resistance of the loop should be lower than 20mΩ.
6	工作环境条件 Working Environment Condition	工作温度:-30℃～70℃ Operating Temperature :-30℃ ~ 70℃
		相对湿度:5%～90%RH Relative Humidity :5% ~ 90%RH
7	存储环境条件 Storage Environment Condition	存储温度:-40℃～85℃ Storage Temperature :-40℃ ~ 85℃
		相对湿度:5%～75%RH Relative Humidity :5% ~ 90%RH
8	主回路导通内阻 The main circuit conducts the internal resistance	<20mΩ

5. 通信说明(Communication Description)

5.1. UART 通讯

默认为达锂 UART 通讯协议，可直接与达锂蓝牙、显示屏、上位机等进行通讯使用，也可定制客户通讯协议；The default communication protocol is UART, which can be used to communicate directly with Bluetooth, display, and host computer, etc., and can also be customised to meet the customer's communication protocol;

5.2. RS485 通讯(选配 optional)

默认达锂 RS485 通讯协议，通过专用通讯盒与指定上位机进行通讯，波特率默认为 9600bps。从而在上位机端察看电池的各种信息，包括电池电压、电流、温度、状态、SOC、及电池生产信息等，可授权登陆后进行参数设置及相应控制操作，支持程序升级功能。(本上位机适用于 Windows 系列平台的 PC 机)。The default is up to the Daly RS485 communication protocol,which communicates with the designated host computer through a special communication box, and the default baud rate is 9600bps. Therefore, various information of the battery can be viewed on the host computer, including battery voltage, current, temperature, state, SOC, and battery production information, etc., parameter settings and corresponding control operations can be performed after login, and the program upgrade function can be supported. (This host computer is suitable for PCs of Windows series platforms).

5.3. 蜂鸣器逻辑 Buzzer logic

在上位机配置蜂鸣器使能，且蜂鸣器接在 DO1 口；
默认逻辑为当充放电温度到达 60℃时，响 1 秒停 1 秒，如此持续进行蜂鸣报警，直到温度小于 60℃。
其他逻辑可联系我司业务进行软件定制；
Configure a buzzer to enable on the computer APP , and connect the buzzer to the DO1 port;
When the charging and discharging temperature reaches 60 ° C, the sound will stop for one second, and then the buzzer alarm will continue；
Other logic can contact our business for software customization;

6. 上位机说明(PC Master Description)

PC 上位机 (DALY BMS Tool)功能默认显示数据监控界面，登陆界面输入密码并连接上位机通讯后，显示数据监控，参数读写，生产制造，更多等界面。手机 APP 设置保护(二级)参数。
1、解析各模块发送的数据信息，然后将电压、温度、配置值等显示出来；
2、通过上位机向各模块配置信息；
3、生产参数校准,BMS 升级。
The DALY BMS function of the PC software displays the data monitoring interface by default. After entering a password and connecting to the upper computer for communication, the data monitoring, parameter reading and writing, production manufacturing, and more interfaces are displayed.
The mobile app sets protection parameters and synchronizes secondary and tertiary protection.
1.Analyze the data information sent by each module, and then display the voltage, temperature, configuration value, etc.;
2.Configure information to each module through the host computer;
3.Calibration of production parameters,BMS upgrade.

7. 保护板尺寸图(Dimensional Drawing Reference)

30/40/60A 结构尺寸（不含配件） Dimensions of mainframe structure (without accessories)	长*宽*高 ：101.1*65.5*14.2（mm） Length*Width*Height：101.1*65.5*14.2（mm）
注：示意图为最大串数全功能版本，以实物的配置为准 Note:The schematic is for the maximum number of strings full-featured version, the configuration of the physical object shall prevail	

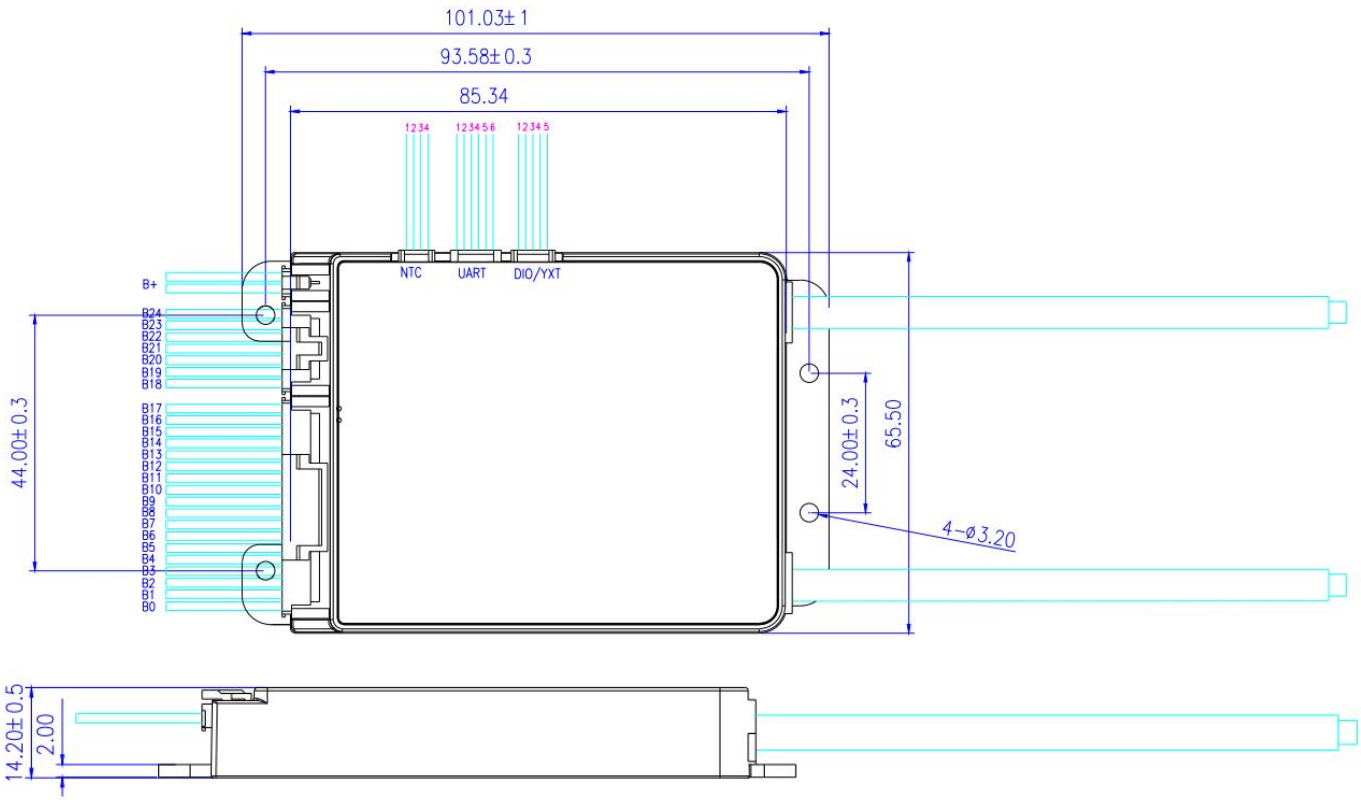

8. 接口定义(Interface Definition)

8.1. 接口引脚说明 Interface pin instructions

接口名称 Interface name	Pin 脚	标号 Label	定义说明 Definition description
B-接口 B-interface	/	B-	电池总负，接电池总负 Battery negative, connect to battery negative
P-接口 P-interface	/	P-	保护板充放电负极，接充放电负端 The charge and discharge negative terminal of the protection board is connected to the negative terminal of the charge and discharge
采样接口 Sampling interface PHB 2.0 带扣	1	B0	接第 1 节电池负级 Connect to the negative terminal of the first battery
	2	B1+	接第 1 节电池正级 Connect to the positive terminal of the first battery
	3	B2+	接第 2 节电池正级 Connect to the positive terminal of the second battery
	...	...	接最后 1 节电池正级 Connect the positive terminal of the last battery
	注：≤17 串为 1 个接口；＞17 串为 2 个接口； Note: ≤17 strings are 1 interface; ＞17 strings are 2 interfaces;		
B+接口	1	B+	接最后 1 节电池正极 Connect the last positive battery terminal
NTC-A 接口 NTC-A interface GH1.25 4Pin	1	NTC-1	1#温度线 1 # Temperature line
	2	GND	地 GND
	3	GND	地 GND
	4	NTC-2	2#温度线 2 # Temperature line
Uart1 接口 Uart1 Interface	1	GND	地 GND
	2	3.3V	供电电源 3.3V Power supply is 3.3V

GH1.25 6Pin	3	12V	供电电源 8-12V Power supply is 8- 12V
	4	S1	激活按键 Activate button
	5	TX	通讯发送端 Communication sending end
	6	RX	通讯接收端 Communication receiving end
一线通/DIO 接口 One - Line Communication/ DIO parallel interface GH1.25 5Pin	1	POW 12V	12V ≤500mA
	2	GND	地 GND
	3	YXT	一线通 One - Line Communication 注：若要使用此功能需要提前沟通使用哪种一线通协议 Note: If you want to use this feature, you need to communicate in advance about which type of one-line communication protocol to use.
	4	C-/GND	
	5	DO	12V ≤200mA DO

8.2. 主要线材说明 Description of main wires

线材名称 Line name	默认规格 Default specification	选配规格 Optional specifications
线材名称 Line name	默认规格 Default specification	选配规格 Optional specifications
NTC 线 NTC line	28AWG L=250mm GH1.25	L=500mm 、L=700mm、L=900mm
B- 线	10AWG L=120±8mm 蓝色	\
P- 线	10AWG L=120±8mm 蓝色	\
采样线 Sampling line	24AWG L=450mm PHB2.0	L=450mm 、L=600mm、L=800mm

9. 接线使用说明及 APP 下载 (Wiring instructions and APP downloads)

扫码查看说明书及下载 APP，或使用电脑浏览器登录：https://www.dalyelec.com/service.html

Scan the QRcode using the browser to view the user manual and download APP， or use a computer browser to access this website: https://www.dalyelec.com/service.html

注意：采样线接线（关键步骤）：采样线用于检测每串电芯电压，顺序绝对不能错。以常见的 4 - 24 串通用排线为例，从右边第一根黑色排线接电池组总负极（对应 B0），靠近黑色的第一根红线接 B1+，第二根红线接 B2+，依此类推。若为 16 串电池，第 16 根红线接 B16+；多余排线可不接，直接剪断，注意做好端口防护。

Note: Sampling Line Wiring (Key Step): The sampling line is used to detect the voltage of each battery cell, and the sequence must not be wrong. Taking the common 4-24 series universal ribbon cable as an example, connect the first black wire on the right to the total negative terminal of the battery pack (corresponding to B0), the first red wire next to the black one to B1, the second red wire to B2, and so on. For a 16-series battery, the 16th red wire is connected to B16; any extra wires can be left unconnected and cut off directly, making sure to properly protect the terminals.

10. 保修(Warranty)

本公司生产的所有锂电池保护板，质保一年；人为因素导致损坏的，有偿维修。

All lithium battery BMS produced by our company has one-year warranty; if the damage caused by human factors, paid maintenanc

11. 注意事项(Precautions)

11.1. 不同电压平台的电池使用前需对 BMS 进行电池类型的设置，一般情况出厂默认为铁锂参数；Batteries of different voltage platforms need to be set for the BMS before use of the battery type, the general situation of the factory default lithium iron parameters;

11.2. 产品出厂时默认为最大串数，初次上电使用时会自动识别串数，如识别失败，可用 APP 或者上位机进行设置；The product defaults to the maximum number of strings when the product is shipped from the factory, and the number of strings will be recognized automatically when the product is first powered up and used, if the recognition fails, it can be set by APP or the host computer;

11.3. 焊接采样排线：从细黑线连接电池 B- (总负极)开始，第 2 根线连接第 1 串电池正极， 后面依次连接每一串电池的正极；最后将 B+线也焊接在最后一串(总正极)上。Welding sampling cable:Start with the thin black wire connecting battery B-(total negative electrode),the second wire connects the positive electrode of the first string of batteries,and then connects the positive electrode of each string of batteries in turn;finally,weld the B+wire on the last string (total positive pole)

11.4. 不同厂家的排线不通用，请确保使用我们公司配套排线；The cables of different manufacturers are not universal, please make sure to use our company's matching cables

11.5. 在测试、安装、接触和使用保护板时，要做好防静电措施；Take measures to discharge static electricity when testing, installing, touching and using the BMS

11.6. 不要使保护板的散热面直接接触电芯，否则热量会传送到电芯，影响电池的安全；Do not let the heat dissipation surface of the BMS directly contact the battery cells, otherwise the heat will be transferred to the battery cells and affect the safety of the battery

11.7. 不可自行拆卸、更改保护板元器件；Do not disassemble or change BMS components by yourself

11.8. 组装作业中避免散热片与电芯、镍带接触； Avoid contact between the heat sink and the battery core and nickel strip during assembly operations.

11.9. 如果保护板出现异常，请停止使用，等问题解决了再使用；If the BMS is abnormal, please stop using it and use it after the problem is solved

11.10. 插拔针座连接线，注意按压卡扣位拔插，否则可能造成线材损坏；Plug and unplug the connector cable, pay attention to press the buckle position to unplug and unplug, otherwise the wire may be damaged.

11.11. accessory. For series connection, it needs to be customized separately.

11.12. 当电池为 4、5 串铁锂时，保护板的 Uart 及 DO 的 12V 电压不会稳压输出，会根据电池总压变化，实际电压值会略低于电池总压。故欠压时，涉及的 12V 输出的配件会因供电不足而无法使用，例如 WIFI 模块、4G 模块等；When the battery is 4、5strings of LiFePO4, the 12V voltage of the Uart and DO of the BMS does not regulate the voltage output, and the actual voltage value will be slightly lower than the total battery voltage according to the total battery voltage change. Therefore, in the case of undervoltage, accessories with 12V output will be unable to be used due to insufficient power supply, such as WIFI module, 4G module, etc.

12. 特别说明(Special Note)

我司产品进行严格的出厂检验测试，但是因为客户使用的环境不同（特别是在高温、超低温、太阳下等），难免会出现保护板故障，所以客户在选择和使用保护板时，需要在友好的环境下使用及选择一定冗余量的保护板。

Our products undergo strict factory inspection and testing, but due to the different environments used by customers (especially in high temperature, ultra-low temperature, under the sun, etc.), it is inevitable that the protection board will fail. Therefore, when customers choose and use BMS, they need to be in a friendly environment, and select a BMS with a certain redundancy capability.

产品更改说明 Product change Instructions			
版本 （Version）	更改内容 （Change content）	更改人 （Editor）	更改日期 （Change date）
A0	初版 First edition	赵希豪	2025/3/28
A1	修改参数和增加兼串内容	赵希豪	2025/5/15
A2	修改放电过流保护动作，尝试 5 次锁定	赵希豪	2025/8/18
A3	增加接线注意事项	赵希豪	2025/12/22