圆柱型锂离子电芯规格书

PRODUCT SPECIFICATION

Cylindrical Lithium-ion Cell

电芯型号 : INR18650-29E

Model : INR18650-29E

受控

Customer Approval 客户认同	Signature签名	Date日期
	Company Name: 公司名称 :	
	Company Stamp: 公司印章 :	

Document No 文件编号	Q/DMLDC技03.31-2021	Version No 版本号	A/0
Prepared By 制定	Standardized By (Quality) 标准化	Checked By (Technology Manager) 审核	Approved By (Technology Leader) 审批

1. Scope 适用范围

This product specification has been prepared to specify the Cylindrical Lithium-ion Cell to be supplied to the customer by HENGDIAN GROUP DMEGC MAGNETICS Co.,Ltd.

本规格书适用于由横店集团东磁股份有限公司生产的圆柱型锂离子电芯。

2. Description and Model 型号及说明

2.1 Description 说明 Cylindrical Lithium-ion Cell 圆柱型锂离子电芯

2.2 Model 电芯型号 INR18650-29E

2.3 Site 产地 Manufactured in Zhejiang, China

3. General Specification 电芯特性

NO. 序号	ITEMS 项目	SPECIFICATION 参数
3.1	Nominal Capacity 标称容量	2900mAh@0.2C
3.2	Minimum Capacity 最小容量	2800mAh@0.2C
3.3	Nominal Voltage 标称电压	3.7V
3.4	Charging Voltage 充电电压	4.2 V
3.5	Charging Method 充电方式	CC-CV (0.5C, 4.2V, 0.05C cut-off) 恒流恒压充电（电芯以 0.5C 恒流充电至 4.2V 转恒压充电，截止电流 0.05C)
3.6	Standard Charge Current 标准充电电流	0.5 C
3.7	Max Charge Current 最大充电电流	1C
3.8	Discharge Cut-off Voltage 放电终止电压	2.5 V
3.9	Standard Discharge Current 标准放电电流	1C
3.10	Max Discharge Current 最大放电电流	6A
3.11	Internal Resistance 内阻	＜28 mΩ(ACIR)
3.12	Cycle Life 循环性能	+0.5C/-1C Cap(1000th)/Cap(Av10)≥80%

3.13	Operating Temperature（Cell surface temperature） 工作温度（电芯表面温度）	Charge 充电时： 0 to 50°C Discharge 放电时： -20 to 60°C
3.14	Cell Weight 重量	＜47 g
3.15	Cell Dimension 电芯尺寸	Height（高度） : 64.95mm±0.20 mm Diameter（直径）:18.25 mm±0.20 mm Refer to the following Fig. 1 参考附图 1
3.16	Storage Environment 存储环境	1 year ： -20~25°C ≤70%RH 3 months ： -20~45°C ≤70%RH 1 month ： -20~60°C ≤70%RH

4. Outline Dimensions 外形尺寸

See the following Fig. 1 单位：毫米 Unit ： mm

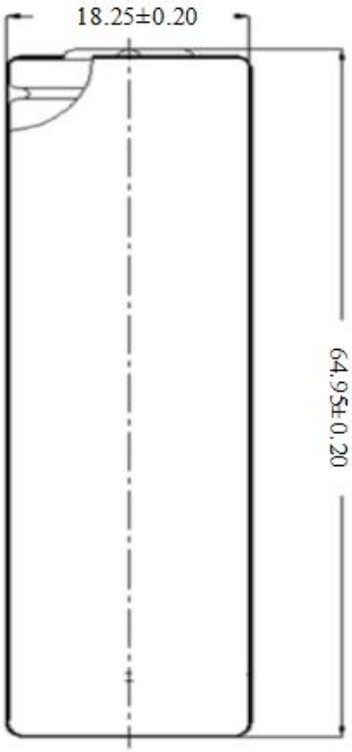

5.Prohibited area for welding at bottom 底部禁止焊接区域

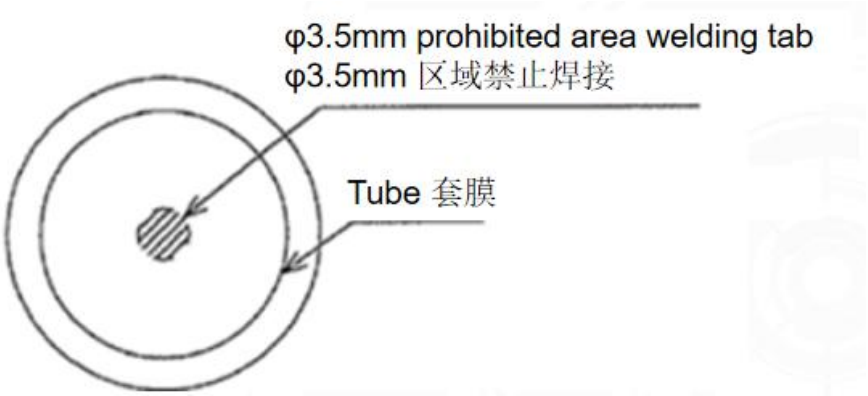

6. Standard Test Conditions 标准试验条件

6.1 Environmental Conditions 环境条件

Unless otherwise specified, all tests stated in this specification are conducted at 25±2°C and humidity of 65±20%.
除非有特殊说明，所有测试的环境条件要求如下：温度：25±2°C、湿度：65±20%。

6.2 Measuring Instrument Requirements 测量仪表要求

Voltage meter: The voltage tester internal resistance is ≥ 10 KΩ/V.
电压仪表要求：测量电压的仪表内阻不小于 10KΩ/V。
The voltage and current measurement device accuracy grade: 0.5mV and 0.5mA or higher.
电压、电流测量仪器精度等级：不低于 0.5mV 和 0.5mA。
AC Impedance meter: 1KHz.
交流阻抗仪测量频率：1KHz。
Temperature meter precision: ≤0.5℃.
温度测试仪精度：≤0.5℃。
Slide caliper: 0.01mm.
游标卡尺精度：0.01mm。
Electronic scale: 0.1g.
电子秤精度：0.1g。

7、Characteristics 特性

7.1 Standard Charge 标准充电

This "Standard Charge" means charging the cell with a constant current of 0.5C and with constant voltage 4.2V at 25±2°C, with 0.05C cut-off.
标准充电：指电芯在 25±2℃环境下，以 0.5C 电流恒流充电至 4.2V 转恒压充电，恒压充电的截止电流为 0.05C。

7.2 Temperature Dependence of Discharge Capacity 不同温度下的放电容量

Discharge capacity comparison at each temperature, measured with discharge constant current of 1C and till voltage 2.5 V reached after the standard charging at 25±2°C is as in below table.
电芯在 25±2℃环境下标准充电后，在下列温度下以 1C 电流放电至 2.5V，对比各个温度下的放电容量。

	Discharge Temperature				
Temperature	-20℃	-10℃	0℃	25℃	55℃
Relative Capacity	≥70%	≥75%	≥80%	100%	≥90%

Note: If charge temperature and discharge temperature are not the same, the interval for temperature change is 2 hours.
备注：如果充电温度和放电温度不同，电芯在放电前至少需要先搁置 2h。

7.3 Discharge Rate Capabilities 倍率放电性能

Discharge capacity is measured with the various currents as in below table and with 2.5V cut-off after the Standard charge at 25±2°C.
电芯在 25±2℃环境下，标准充电后，以下表中的不同电流放电至 2.5V 的放电容量。

	Discharge Condition			
Current	0.5C	1C	2C	3C
Relative Capacity	100%	≥95%	≥90%	≥85%

7.4 Cycle Life Test 循环测试

Each cell is charged in accordance with 7.1, and stored for 5 minutes, then discharged to voltage 2.75V at a constant current of 1C, after that, rest for 5 minutes prior to next charge/discharge cycle. The cell shall be continuously charged and discharged for 1000 times at 25±2℃.

电芯按 7.1 规定充电结束后，搁置 5min，然后以 1C 电流放电至终止电压 2.75V，放电结束后，搁置 5min，再进行下一次充放电循环。电芯在 25±2℃环境下，连续进行充放电循环 1000 次。

After 1000 cycles, Capacity Retention = Cap(1000th)/Cap(Av10)≥80%.

1000 次循环后，容量保持率≥80%。

Note: The cycle life just can be ensured based on the charge and discharge cycle in the above mode at 25±2℃. For the other operating conditions, cycle life will not be ensured.

备注：仅对 25±2℃环境下，以上述模式充放电循环，保证循环寿命。对于其他工况环境，循环寿命不做保证。

7.5 Storage Characteristics 1 存储特性 1

The capacity after storage for 7 days at 55±2 °C is measured by applying standard charge condition and with discharge current of 1C with 2.5V cut-off at 25±2℃. The capacity retention rate and recovery rate were tested by comparing this capacity with before storage capacity with discharge constant current 1C at 25±2℃.

电芯标准充电后，在 55±2 °C 环境下存储 7 天，然后在 25±2℃环境下以 1C 放电至 2.5V，对比存储前 25±2℃ 1C 放电容量，测试容量保持率和恢复率。

$$\text{Capacity retention} = \frac{\text{Residual capacity after the storage}}{\text{Initial Capacity}} \geq 85\%$$

$$\text{容量保持率} = \frac{\text{存储后剩余容量}}{\text{初始容量}} \geq 85\%$$

$$\text{Capacity recovery} = \frac{\text{Recovery capacity after the storage}}{\text{Initial Capacity}} \geq 90\%$$

$$\text{容量恢复率} = \frac{\text{存储后恢复容量}}{\text{初始容量}} \geq 90\%$$

7.6 Storage Characteristics 2 存储特性 2

The capacity after storage for 28 days at 25±2 °C is measured by applying standard charge condition and with discharge current of 1C with 2.5V cut-off at 25±2℃. The capacity retention rate and recovery rate were tested by comparing this capacity with before storage capacity with discharge constant current 1C at 25±2℃.

电芯标准充电后，在 25±2 °C 环境下存储 28 天，然后在 25±2℃环境下以 1C 放电至 2.5V，对比存储前 25±2℃ 1C 放电容量，测试容量保持率和恢复率。

$$\text{Capacity retention} = \frac{\text{Residual capacity after the storage}}{\text{Initial Capacity}} \geq 85\%$$

$$\text{容量保持率} = \frac{\text{存储后剩余容量}}{\text{初始容量}} \geq 85\%$$

$$\text{Capacity recovery} = \frac{\text{Recovery capacity after the storage}}{\text{Initial Capacity}} \geq 90\%$$

$$容量恢复率 = \frac{存储后恢复容量}{初始容量} \geq 90\%$$

7.7 Status of the cell as of ex-factory 电芯出厂状态

The cell should be shipped in 3.500V ~ 3.700V（≤30% SOC）Open Circuit Voltage range.
电芯运输过程中，电压应在 3.500V ~ 3.700V（≤30% SOC）范围内。

8. Safety 安全性能

All below tests are carried out with the equipment with forced ventilation and explosion-proof device. Before start of the test, all cells should be charged in accordance with 7.1, and stored 24 hours prior to testing.
下述试验应在有强制排风条件及防爆措施的装置内进行，在试验前所有的电芯都按 7.1 规定标准充电方式充电，并搁置 24h 后，再进行以下试验。

Test Item 测试项目		Test Method 测试方法	Criteria 测试标准
8.1	Crush Test 挤压测试	A cell is to be crushed between two flat surfaces on its longitudinal axis. The force for the crushing is to be applied by a hydraulic ram or similar force mechanism. The flat surfaces are to be brought in contact with the cells and the crushing is to be continued until an applied force of 13±1 KN is reached. Once the maximum force has been obtained, it is to be released. 将电芯置于两个挤压平面之间，用液压油缸或类似的力挤压，挤压面与电芯接触，逐渐增加压力值13±1KN后停止。	No explosion，no fire 不起火、不爆炸
8.2	Heating Test 加热测试	A cell is to be heated in a gravity convection oven or circulating air oven. The temperature of the oven is to be raised at a rate of 5°C per minute to a temperature of 130±2°C and remain for 30 minutes and observed for 1 hour. 将电芯放在电热鼓风干燥箱中加热，温度以5°C/min的速率由室温升至130±2°C并保持30min，观察lh。	No explosion，no fire 不起火、不爆炸
8.3	Over-charge Test 过充电	A cell charged in accordance with 7.1，and then charged with charge current of 1C for 1h or charge to 1.5 times the max changing voltage, observe for 1h. 电池按规定方法充电后，继续1C充电1h或者充电至额定电压的1.5倍，观察1h。	No explosion，no fire 不起火、不爆炸
8.4	Short-circuit Test 短路测试	Short-circuit the standard charged cell by connecting positive and negative terminal 10min by less than 100 mΩ wire. 短接电芯的正负极10min，外部线路总电阻小于100 mΩ。	No explosion，no fire 不起火、不爆炸
8.5	Low Pressure 低气压	Each fully charged cell is placed in a vacuum chamber with the ambient temperature (20±5°C). Once the chamber has been sealed, its internal pressure is gradually reduced to a pressure equal to or less than 11.6KPa held at that value for 6 hours. And then take 1 hour to observe. 将电芯放入温度为20±5°C的低气压箱中，调节试验箱中气压为11.6KPa，静置6h后观察1h。	No explosion，no fire，no leakage 不起火、不爆炸、不漏液

8.6	Seawater Immersion 海水浸泡	Each fully charged cell is immersed in 3.5% NaCl solution (weight percent, this solution concentration is same to seawater) for 2 hours. 将电芯完全浸没于质量分数为3.5%NaCl溶液中，浸泡2h。	No explosion，no fire 不起火、不爆炸
8.7	Temperature Cycling 温度循环	The fully charged cell shall be stored at the test temperature of 75±2℃ for at least 6 hours, and then at the test temperature of -40±2℃ for at least 6 hours. The maximum time interval between the two extreme test temperatures is 30 minutes. This procedure must be repeated 10 times, followed by the storage of all test cells and battery packs at ambient temperature (20±5℃) for 24 hours. 满电电池在试验温度为75±2℃下存放至少6小时，接着在试验温度为－40±2℃下存放至少6小时。两个极端试验温度之间的最大时间间隔为 30 分钟。这一程序须重复 10 次，接着将所有试 验电池和电池组在环境温度（ 20±5℃）下存放 24 小时。	No explosion，no fire，no leakage 不起火、不爆炸、不漏液
8.8	Drop Test 跌落测试	At normal temperature, the fully charged fresh cell will fall freely onto the cement road surface at a drop height of 1 m. The two end surfaces of the cell dropped once each, and the cylinder dropped 2 times. A total of 4 drop tests were carried out, and the appearance was observed after the experiment was placed for 1h. 常温下将充满电的、未循环使用过的电芯按 1m 的跌落高度自由落体跌落于水泥路面上。电芯两个端面各跌落 1 次，圆柱面跌落 2 次，共计进行 4 次跌落试验，实验放置 1h 再观察外观。	No explosion，no fire 不起火、不爆炸
8.9	Over-discharge Test 过放测试	A cell is charged in accordance with 7.1, then discharged by 1C current for 90 min and observed for 1 hour. 电芯按7.1规定充电结束后，以1C电流放电90min，观察lh。	No explosion，no fire，no leakage 不起火、不爆炸、不漏液
8.10	Vibration Characteristics 振动性能	After standard fully charge, cell shall be attached to a vibration table directly and subjected to vibration that consists of 10 Hz to 55 Hz to 10 Hz at the speed of 1Hz/min in 90-100 mins. The total excursion of the vibration is 0.8mm (0.060 inches). The cell shall be vibrated in each direction along axis of the cylinder and the vertical directions of axis of the cylinder. 将满电电芯放在振动实验台上，在90-100mins由10 Hz到55 Hz再到10Hz以1Hz/min的速率变化，振幅为0.8mm(0.060英寸)进行振动实验。电芯在电芯的轴向和与电芯轴向垂直的两个方向上振动。	No explosion，no fire，no leakage 不起火、不爆炸、不漏液

There are no guarantees for other security test items.
对于除此以外的安全测试项目，不做保证。

9. Warranty 保证

The period of warranty is one year from the date of shipment. However, even though the problem occurs within this period, DMEGC won't replace a new cell for free as long as the problem is not due to the failure of DMEGC manufacturing process or is due to customer's abuse or misuse.
电池的保质期从出货之日算起为一年。在质保期内，如非东磁制程原因导致的电芯问题，而是由于客户误用或者滥用造成的电芯质量问题，东磁不承诺免费更换。

DMEGC will not be liable for any issue raised due to use outside the limits as described in this instruction.
东磁公司对违反安全守则操作所产生的问题不承担任何责任。
DMEGC will not be liable for any issue caused by application electric circuit, cell pack and the charger.
东磁公司对于电路，电池组以及充电器搭配使用所产生的问题不承担任何责任。
DMEGC will be exempt from warranted for any defect on cells occurred during assembling after acceptance.
东磁公司对于出货后客户在电芯组装过程中产生的不良电芯不予以质量保证。

10. Others 其它

10.1 Storage for a long time 长时间存储

If the cell is kept for a long time (3 months or longer), it is strongly recommended that the cell be kept at control environment at dry and low-temperature（≤70%RH、-20~25℃）.
假如电芯要存放 3 个月或更久，强烈建议将电芯保存在干燥、阴凉处（≤70%RH、-20~25℃）。

Any subjects that is not include in this specifications, should be confirmed and agreed by both parties.
规格书未尽事宜，由双方协商解决。

11. Packaging 包装

100 cells per carton box, 2 boxes in an outer box, in total 200 cells per outer box. Please refers to following Fig. 2
电芯包装每盒装 100 只电芯，每箱装 2 盒，共 200 只电芯。包装示意图见附图 2。

Following Fig. 2 附图2

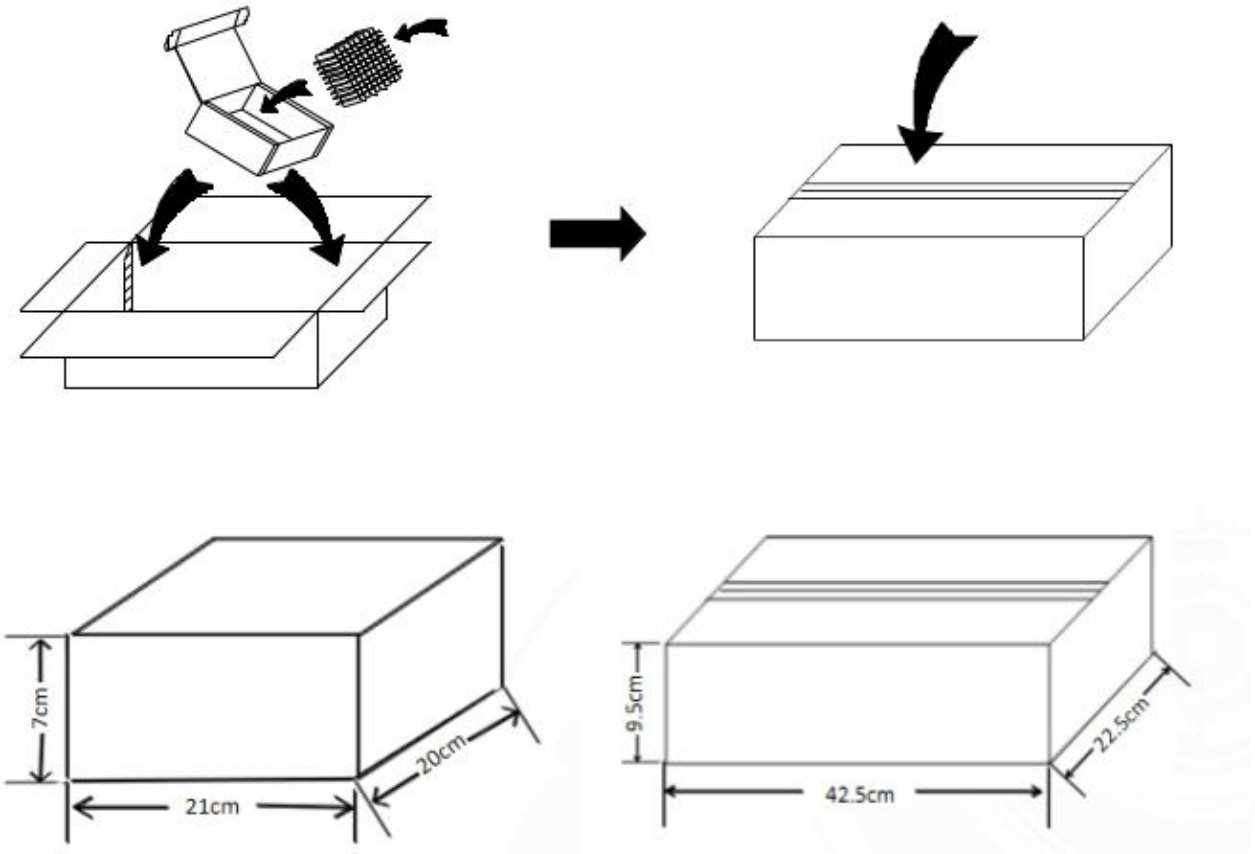

Precautions and prohibitions for handling lithium ion cells and batteries

锂离子电池及电池组的处理注意事项和禁止事项

Inaccurate handling of lithium ion and lithium ion polymer rechargeable battery may cause leakage, heat, smoke, an explosion, or fire.
锂离子和锂离子聚合物电池处理不当可能导致泄漏、发热、烟雾、爆炸或火灾。
This could cause a failure or deterioration of performance. Please make sure to follow instructions carefully.
这可能会导致性能下降或丧失。请务必仔细按照说明操作。

Safety precaution and prohibitions　安全预防和禁止事项

To assure product safety, describe the following precautions in the instruction manual of the application.
为确保产品安全，请在使用说明书中说明以下注意事项。
DMEGC will not accept the warranty for the following misused of the cell.
对于存在以下滥用现象的电芯，东磁不对其承担质保。

[Warning]　危险

Electrical misuse 电性能滥用

Don't charge the cell by using electric outlet directly.

不要直接用插座给电池充电。

Don't charge the cell in reverse polarity.

不要给电池反向充电。

Use dedicated charger.

使用专用充电器。

Use or charge the cell only in the dedicated application.

仅在专用应用程序中对电池进行使用或充电。

Environmental misuse　环境滥用

Don't leave the cell near the fire or a heat source.

不要把电池放在靠近火源或热源的地方。

Don't throw the cell into the fire.

不要把电池扔进火里。

Don't leave, charge or use the cell in a car or similar place where the inside of temperature may raise to over 60°C.

不要在温度可能超过 60℃的地方放置、充电或使用电池，如汽车内或类似的地方。

Don't submerge, throw the cell in the water or spray it with water.

请勿将电池浸没、抛掷、浸湿于水中。

Others　其它

Don't fold the cell that is cased with laminated film such as pouch and Polymer.

不要用薄膜(如聚合物塑料袋)覆盖电芯。

Don't store the cell in a pocket or a bag together with metallic objects such as keys, necklaces, hairpins, coins, or screws.

不要将电池与钥匙、项链、发夹、硬币或螺丝等金属物品一起存放在口袋或袋子里。

Don't short circuit (+) and (-) terminals with metallic object.

不要故意将电池的正负极端子用金属物体连接。

Don't pierce the cell with a sharp object such as a needle, pin or screw drivers.

不要用针、螺丝刀等锋利的物体刺穿电池。

Don't heat a spot or an area of the cell with heated objects such as soldering iron.

不要用烙铁等加热物体加热电池。

Don't hit the cell with heavy objects such as a hammer or weight.

不要用锤子等重物击打电池。

Don't step on the cell, throw or drop it on the hard floor, avoid mechanical shock on the cell.

请勿踩在电池上、将电池扔或摔在坚硬的地板上，以免造成机械冲击。

Don't disassemble the cell or modify the cell design including electric circuit.

请勿拆卸或修改电池及其电路设计。

Don't use damaged or deformed cell.

不要使用严重损坏或变形的电池。

Don't put the cell into a microwave oven, dryer, or high-pressure container.

不要将电池放入微波炉、烘干机或高压容器中。

Don't use or assemble the DMEGC cells with other manufactures' cells, different types and/or models of cells such as dry cells, nickel-metal hydride cells, or nickel-cadmium cells.

请勿将电池与其他制造商的电池、不同类型和/或型号的电池(如干电池、镍氢电池或镍镉电池)一起使用或组装。

Don't use or assemble old and new cells together.

不要混用或组装新旧电池。

Stop charging the cell if charging isn't completed within the specified time.

如果在规定时间内没有完成充电，请停止充电。

Stop using the cell if the cell becomes abnormally hot, or if you detect any discoloration, deformation, or any other abnormal conditions during the use, charge, or storage.

如果在使用、充电或储存过程中发现电池出现异常发热、变色、变形或异常情况，请停止使用电池。

Keep the cell away from fire immediately, especially when leakage or foul odors are detected. If leaked liquid comes in contact with your skin or cloths, wash well with fresh water immediately.

将电池远离火源，尤其是发现有泄漏或异味时。如果液体泄漏到皮肤或衣物上，立即用清水冲洗干净。

If liquid leaking from the cells gets into your eyes, don't rub your eyes and wash them with clean water and go to see a doctor immediately.

如果电池漏液进入眼睛，不要揉搓眼睛，应用清水洗净并立即前往医院治疗。

If the terminals of the cells become dirty, wipe with a dry cloth before using the cell.

如果电池的正负极端子变脏，使用前用干布擦拭。

Cover terminals with proper insulating tape before disposal.

处理电池前应先用合适的绝缘胶带覆盖正负极端子。

[Caution!]　谨慎操作

Electrical misuse　电滥用

Charging current must be controlled by specified value in cell specification.

充电电流必须控制在电芯规格书中指定的值以内。

When the ambient temperature is lower than 15℃ or higher than 40℃, charging greater than 0.2c will affect the cell life cycle.

当环境温度低于 15℃或者高于 40℃时，大于 0.2C 充电会对电芯循环造成影响。

Cut-off voltage of charging must be less than 4.2V, otherwise, it will affect the electrical and safety performance of the cell.

充电截止电压不得超过 4.2V，否则会对电芯的电性能与安全性能造成影响。

Charger must stop charging cell by detecting current specified in cell’s specification.

当达到电芯规格中指定的电流时，充电器必须停止充电。

Discharge current must be controlled by specified value in cell’s specification.

放电电流必须控制在电芯规格书中指定的值以内。

Cut-off voltage of discharging must be above 2.5V, otherwise, it will affect the electrical and safety performance of the cell.

放电截止电压不得低于 2.5V，否则会对电芯的电性能与安全性能造成影响。

The cell should be used within the specified temperature range, beyond which the electrical and safety properties of the cell will be affected.

电芯需在规定的温度范围内使用，超出使用温度范围会影响电芯的电性能与安全性能。

Others　其它

The cell should be stored in a dry area with no corrosive gas.

电芯应在干燥无腐蚀性气体的环境下储存。

Don’t put pressure on the cell.

不要让电芯承受任何压力。

Storage temperature requirements：

储存温度要求：

When stored within 1 month : -20°C ~ +60°C
储存期 1 个月 : -20°C ~ +60°C
When stored within 3 months: -20°C ~ +45°C
储存期 3 个月 : -20°C ~ +45°C
When stored within 12 months : -20°C ~ +25°C
储存期 12 个月: -20°C ~ +25°C
After the cell assembled in a pack, the pack should be charged to 40% SOC. This reduce the risk of the cell voltage drop too low if the pack not been used for one year.
电芯组装后，须将电池充电到约 40% 荷电态，以避免电池包长时间（超过一年）不使用导致电压降的过低。

Keep the cell out of reach of children to avoid any accidents such as swallowing.

电池远离婴幼儿，避免发生吞咽等意外。

If younger children use the cell, their guardians should explain the proper handling method and precaution before using.

如儿童使用电池，其监护人应在使用前说明正确使用方法及注意事项。

Before using the cell, be sure to read the user's manual and precaution of it's handling.

在使用电池前，请务必阅读使用说明书及注意事项。

Replace the cell when effective usage time of the cell becomes much shorter than usual.

当电池的使用时间比以往短很多时，请及时更换电池。

Precautions on Battery Pack Design.电池包设计预防措施

Avoid design shapes and mechanism that easily allow penetration of water inside the battery pack or impacted by ESD
终端外形与构造设计需能够有效阻止静电及水进入电池包内部。
Overcharge protection should be activated below 4.2V/cell during charging. Then charge current shall be shut down.
过充保护能够确保电芯充电电压低于 4.2V，若电芯电压高于 4.2V，则停止充电。
Below a voltage of 2.5V/cell, over-discharge protection should activate. Then discharge current shall be disconnected and consumption current should fall below 1μA.
过放保护能够在电芯电压达到 2.5V 时停止放电且漏电流需小于 1μA。
When discharge current exceeds 20A, the over-discharge current protection should be activated, and shutting down this over discharge current.
电芯放电电流超过 20A 时，过流保护作用并停止放电。
To avoid discharging during storage, design the battery pack with low current consumption electronic circuit (e.g., Protection circuit, fuel gauge, etc).
电池包电路设计低漏电流（例如保护电路，电量监控等）以避免电芯储存过程被放电。

Battery Pack Assembly 电池组组装

It is prohibited to use a damaged cell. Do not use abnormal cell which has been damaged by shipping stress, drop, shorted, twice spot welded or shows any sign of electrolyte leakage.
禁止使用受损电芯。不要使用由于运输损伤、跌落、短路、二次点焊或其它原因造成破损或漏液电芯。
The cell should be inspected visually before battery assembly.
电池组装前检查电池外包装。

Inspect voltage and internal impedance of the cell before using.

使用前需检测电芯电压及内阻。

Do not solder on a cell, to avoid damage to the cell. First use spot welding to connect a plate to the cell, and then use soldering to connect the wire to the plate.

不可对电池直接进行锡焊以避免对电芯造成损伤，电池包组装使用点焊方式在电芯上焊接镍片后再连接导线及线路板。

The battery assembler must pay attention to electrostatic discharge to avoid damage to electronic components due to ESD.

电池组装须注意防静电，避免电子元件损伤。

Battery assembler should pay attention to prevent the short circuit.

电池组装时须注意防止短路。

Safety handling procedure for the transporter

运输安全操作规程

Quarantine 检疫

Packages that are crushed, punctured or torn open to reveal contents should not be transported. Such packages should be isolated until the shipper has been consulted, provided instructions and, if appropriate, arranged to have the product inspected and repacked.

包装被压坏、刺破或撕开查看的，不得运输。在咨询发货人提供指示并在适当情况下安排对产品进行检查和重新包装之前，此类包装应予以隔离。

Spilled Product 漏液产品

In the event of a damage to the packaging that result in fall or drop of cells or batteries, the spilled products should be promptly collected and isolated. The shipper should be contacted for further instructions.

如果包装破损导致电芯或电池漏液的，应及时收集和隔离漏液的产品，并与发货人联系以获得指示。

Design of battery pack position in the application and the charger

电池组在应用和充电过程中的位置设计

To prevent the deterioration of the battery performance caused by heat, battery shall be positioned (designed) away from the area where heat is generated in the application and the charger.

为防止高温对电池性能的影响，电池在应用和充电过程中应远离产生热量的区域。

横店集团东磁股份有限公司 新能源电池事业部

Hengdian Group DMEGC

New Energy Battery Division

Hengdian, Dongyang, Zhejiang province, China

Tel: 0579-86588418

Website：www.dmegc.com.cn